Installation Instructions and Homeowner's Manual

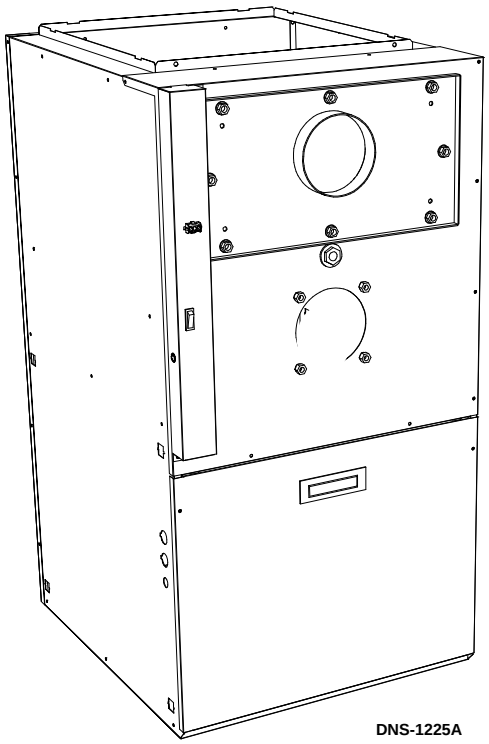

MODELS:

OMF112K14A
OMV112K14A

C US

MULTIPOSITION OIL FIRED FURNACE

INSTALLER / SERVICE TECHNICIAN:

USE THE INFORMATION IN THIS MANUAL FOR THE INSTALLATION / SERVICING OF THE FURNACE AND KEEP THE DOCUMENT NEAR THE UNIT FOR FUTURE REFERENCE.

HOMEOWNER:

PLEASE KEEP THIS MANUAL NEAR THE FURNACE FOR FUTURE REFERENCE.

Attention:

Do not tamper with the unit or its controls. Call a qualified service technician.

Manufactured by:

Dettson Industries inc.
3400 Industrial Boulevard
Sherbrooke, Quebec – Canada - J1L 1V8

www.dettson.ca

Printed on 100% recycled paper 2012-06-12 X40165 Rev. E

TABLE OF CONTENTS

1 SAFETY REGULATIONS 3

1.1 SAFETY LABELING AND WARNING SIGNS 3
1.2 IMPORTANT INFORMATION 3
1.3 DETECTION SYSTEMS 3
1.4 DANGER OF FREEZING 3

2 INSTALLATION 4

2.1 POSITIONING THE FURNACE 4
2.2 CONFIGURATIONS 4
2.3 ELECTRICAL SYSTEM 5
2.4 INSTALLATION OF THE THERMOSTAT 5
2.5 INSTALLATION OF THE BURNER 6
2.6 VENTING 6
2.7 BLOCKED VENT SHUT-OFF DEVICE (BVSO) FOR CHIMNEY VENTING 7
2.8 COMBUSTION AIR SUPPLY AND VENTILATION 7
2.10 DUCTING 8
2.11 SUPPLY AIR ADJUSTMENTS (4 SPEED MOTORS) 8
2.12 SUPPLY AIR ADJUSTMENTS (ECM VARIABLE SPEED MOTORS) 9
2.13 INSTALLATION OF ACCESSORIES 9

3 OPERATION 10

3.1 START-UP 10
3.2 OPERATING SEQUENCE OIL HEATING MODE 10
3.3 CHECKS AND ADJUSTMENTS 10

4 MAINTENANCE 11

4.1 CLEANING THE HEAT EXCHANGER 11
4.2 CLEANING THE BLOCKED VENT SHUT-OFF DEVICE (BVSO) 12
4.3 CHANGING OF THE BURNER HEAD 12
4.4 CHANGING THE NOZZLE 12
4.5 CHANGING THE OIL FILTER 12
4.6 CHANGING THE AIR FILTER 12

5 FURNACE INFORMATION 13

FIGURES

Figure 1: Location and dimensions of ventilation air openings in a closet door 4
Figure 2: Upflow installation 4
Figure 3: Downflow installation 5
Figure 4: Horizontal installation 5
Figure 5: Thermostat wiring, heating and air conditioning with 4 speed motor 5
Figure 6: Thermostat wiring, heating and air conditioning with ECM variable speed motor 6
Figure 7: Thermostat wiring, heating and air conditioning/heat pump with ECM variable speed motor 6
Figure 8: Blower start/stop delays, board #1158 9
Figure 9: Furnace dimensions 17
Figure 10: Wiring diagram 4 speed motor (PSC) 18
Figure 11: Wiring diagram variable speed motor (ECM) 19
Figure 12: Parts list with 4 speed motor (PSC) 20
Figure 13: Parts list with variable speed motor (ECM) ... 22

TABLES

Table 1: Blower speed adjustments, 4 speed motor 8
Table 2: Air adjustments, heating mode 9
Table 3: Airflow adjustments, air conditioning mode 9
Table 4: Airflow adjustments, all modes 9
Table 5: Delay adjustments, heating mode 9
Table 6: Technical specifications 14
Table 7: Airflow data, with 1/2 HP, ECM motors 15
Table 8: Airflow data model with 1/2 HP 4 speed motor 16
Table 9: Min. clearances from combustible material 16
Table 10: Parts list with 4 speed motor (PSC) 21
Table 11: Parts list with variable speed motor (ECM) 23

1 SAFETY REGULATIONS

1.1 SAFETY LABELING AND WARNING SIGNS

The words DANGER, WARNING AND CAUTION are used to identify the levels of seriousness of certain hazards. It is important that you understand their meaning. You will notice these words in the manual as follows:

DANGER

Immediate hazards that WILL result in death, serious bodily injury and/or property damage.

WARNING

Hazards or unsafe practices that CAN result in death, bodily injury and/or property damage.

CAUTION

Hazards or unsafe practices that CAN result in bodily injury and/or property damage.

1.2 IMPORTANT INFORMATION

WARNING

Non-observance of the safety regulations outlined in this manual will potentially lead to consequences resulting in death, serious bodily injury and/or property damage.

a) It is the homeowner's responsibility to engage a qualified technician for the installation and subsequent servicing of this furnace;

b) Do not use this furnace if any part of it was under water. Call a qualified service technician immediately to assess the damage and to replace all critical parts that were in contact with water;

c) Do not store gasoline or any other flammable substances, such as paper, carton, etc. near the furnace;

d) This furnace is designed for use with #1 or #2 heating oil only. The use of gasoline, motor oil or any other oil containing gasoline is prohibited;

e) Never block or otherwise obstruct the filter and/or return air openings;

f) Ask the technician installing your furnace to show and explain to you the following items:
   - **i) The main disconnect switch;**
   - **ii) The shut-off valve on the oil tank;**
   - **iii) The oil filter and how to change it (once a year);**
   - **iv) The air filter and how to change it (check monthly and clean or replace if necessary.)**

g) Before calling for service, be sure to have the information page of your manual close by in order to be able to provide the contractor with the required information, such as the model and serial numbers of the furnace.

WARNING

Installations and repairs performed by unqualified persons can result in hazards to them and to others. Installations must conform to local codes or, in the absence of same, to codes of the country having jurisdiction.

The information contained in this manual is intended for use by a qualified technician, familiar with safety procedures and who is equipped with the proper tools and test instruments.

Failure to carefully read and follow all instructions in this manual can result in death, bodily injury and/or property damage.

1.3 DETECTION SYSTEMS

It is recommended that carbon monoxide detectors be installed wherever oil or gas fired heaters are used. Carbon monoxide can cause bodily harm or death. For this reason, agency approved carbon monoxide detectors should be installed in your residence and properly maintained to warn of dangerously high carbon monoxide levels.

There are several sources of possible smoke and flames in a residence. Smoke and flames can cause bodily harm or death. For this reason, agency approved smoke detectors should be installed in your residence and properly maintained, to warn early on, of a potentially dangerous fire. Also, the house should be equipped with approved and properly maintained fire extinguishers.

Your unit is equipped with safety devices that can prevent it from functioning when anomalies are detected such as a blocked venting system.

1.4 DANGER OF FREEZING

CAUTION

If your furnace is shut down during the cold weather season, water pipes may freeze, burst and cause serious water damage. Turn off the water supply and bleed the pipes.

If the heater is left unattended during the cold weather season, take the following precautions:

a. Close the main water valve in the house and purge the pipes if possible. Open all the faucets in the house;

b. Ask someone to frequently check the house during the cold weather season to make sure that there is sufficient heat to prevent the pipes from freezing. Tell this person to call an emergency number if required.

2 INSTALLATION

This furnace is a true multi-position unit, in that it will function in an upflow, downflow or horizontal configuration to the left or the right. Only a few modifications are required during installation to change from one position to another. The unit is shipped in the upflow configuration and instructions as to how to change to the other positions are included in this manual.

The unit is shipped with a burner and its controls. It requires a 115VAC power supply to the control panel and thermostat hook-up as shown on the wiring diagram, one or more oil line connections, suitable ductwork and connection to a properly sized vent.

All local and national code requirements governing the installation of oil burning equipment, wiring and the flue connection MUST be followed. Some of the codes that may apply are:

CSA B139: Installation code for oil burning equipment.

ANSI/NFPA 31: Installation of oil burning equipment.

ANSI/NFPA 90B: Warm air heating and air conditioning systems.

ANSI/NFPA 211: Chimneys, Fireplaces, Vents and solid fuel burning appliances.

ANSI/NFPA 70: National Electrical Code.

CSA C22.1 or CSA C22.10: Canadian Electrical Code.

Only the latest issues of these codes may be used.

2.1 POSITIONING THE FURNACE

WARNING

Fire and explosion hazard.

The furnace must be installed in a level position, never where it will slope toward the front.

Do not store or use gasoline or any other flammable substances near the furnace.

Non-observance of these instructions will potentially result in death, bodily injury and/or property damage.

CAUTION

This furnace is not watertight and is not designed for outdoor installation. It must be installed in such a manner as to protect its electrical components from water. Outdoor installation will lead to a hazardous electrical condition and to premature failure of the equipment.

The minimum clearances from combustible material for each of the positions are specified in Table 4.

If the furnace is installed in a basement or on a dirt floor, in a crawl space for example, it is recommended to install the unit on a cement base 2.5 cm to 5.0 cm (1" to 2") thick.

The unit must be installed in an area where the ambient and return air temperatures are above 15℃ (60℉). In addition, the furnace should be installed as closely as possible to the vent, so that the connections are direct and kept to a minimum. The heater should also be located close to the centre of the air distribution system.

2.1.1 Installation in an enclosure

The unit can be installed in an enclosure such as a closet. However, 2 ventilation openings are required for combustion air. The openings should be located in front of the furnace approximately 15 cm (6") above the floor and 15 cm (6") below the ceiling. Figure 1 indicates the minimum dimensions required and the location of the openings.

Figure 1: Location and dimensions of ventilation air openings in a closet door

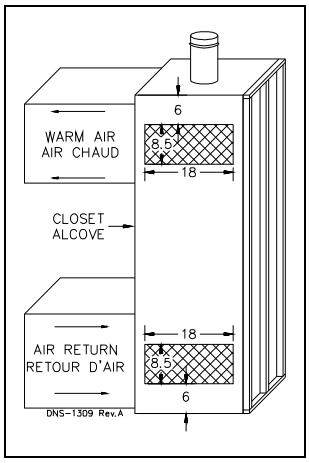

2.2 CONFIGURATIONS

2.2.1 Upflow Installation

The return air opening may be located on either side of the furnace. Care should be taken not to damage the wires inside, while cutting the opening. Install the filter rack supplied with the unit according to the instructions provided with it. It is also recommended to install the blower door before handling or moving the unit. Refer to Figure 2 for additional details.

Figure 2: Upflow installation

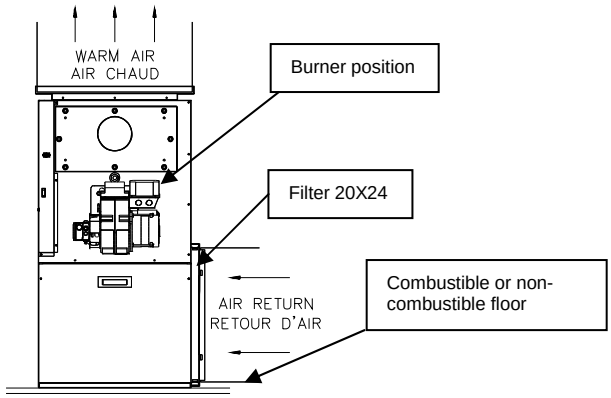

DNS-1227A

2.2.2 Downflow Installation

When the furnace is installed in the downflow position on a combustible floor, the clearances from combustibles must be adhered to. The downflow base DFB-103 or KLASB0901DET can be used to ensure these clearances. Refer to Figure 3 and the installation instructions provided with the base.

The burner must always be installed in the same manner, regardless of the discharge position of the furnace. Refer to Figure 3 for additional details.

The protection plate (B03789) must be installed on the plastic cover of the Beckett NX burner to protect it from vent.

Figure 3: Downflow installation

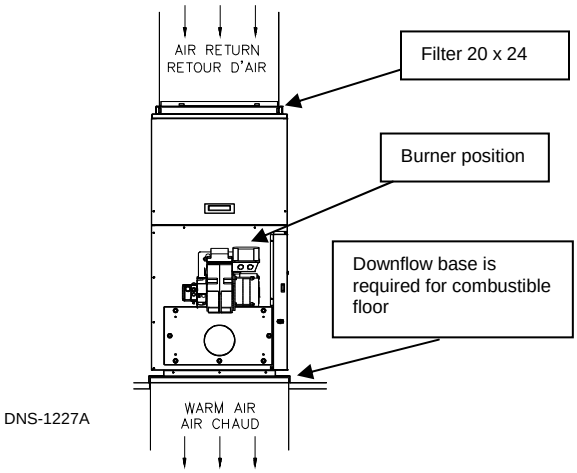

2.2.3 Horizontal Installation

When the furnace is installed in the horizontal position, either suspended or on a combustible floor with a choice of right or left discharge, the clearances from combustible material must be adhered to. If the unit is installed on a combustible floor, the horizontal floor base HFB-101 or KLASB0701DET can be used to ensure these clearances. Refer to the instructions supplied with the base.

The burner must always be installed in the same manner, regardless of the discharge position of the furnace. Refer to Figure 4 for additional details.

Figure 4: Horizontal installation

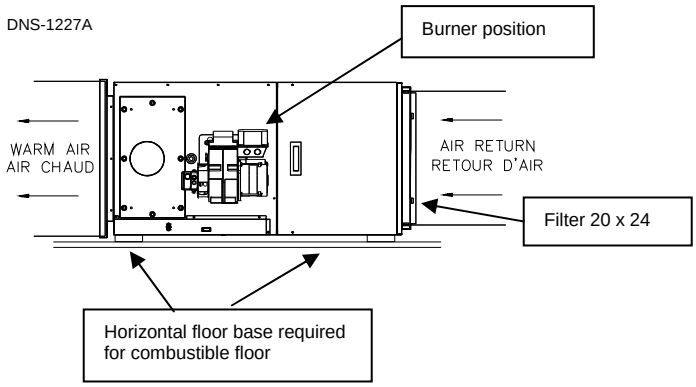

2.3 ELECTRICAL SYSTEM

CAUTION

The exterior of the unit must have an uninterrupted ground to minimize the risk of bodily harm, if ever an electrical problem develops. A green ground screw is supplied with the control box for that purpose.

The appliance must be installed in accordance with the current ANSI/NFPA 70 National Electrical Code, CSA C22.1 Canadian Electrical Code Part 1 and/or local codes.

The control system depends on the correct polarity of the power supply. Connect “HOT” wire (H) and “NEUTRAL” wire (N) as shown in Figures 10 and 11.

A separate line voltage supply should be used, with fused disconnect switch or circuit breaker, between the main power panel and the unit.

Only copper wire may be used for the 115V circuit on this unit. If wires need to be changed, the replacements must have the same temperature resistance as the originals.

2.4 INSTALLATION OF THE THERMOSTAT

A thermostat must be installed to control the temperature of the area to be heated. Follow the instructions supplied with the thermostat. Also refer to the wiring diagrams provided with the heating/air conditioning unit. The connections must be made as indicated on the following diagrams and the wiring diagrams, Figures 10 and 11.

Figure 5: Thermostat wiring, heating and air conditioning with 4 speed motor

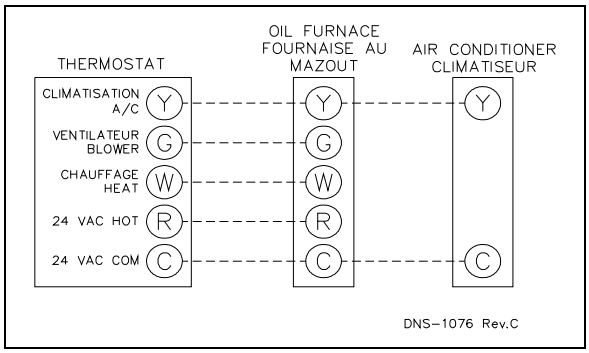

Figure 6: Thermostat wiring, heating and air conditioning with ECM variable speed motor

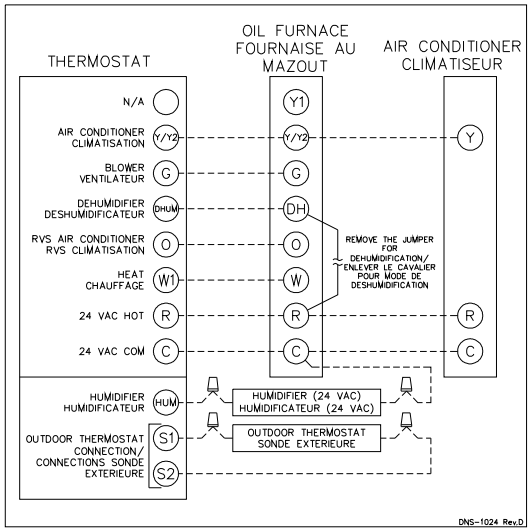

Figure 7: Thermostat wiring, heating and air conditioning/heat pump with ECM variable speed motor

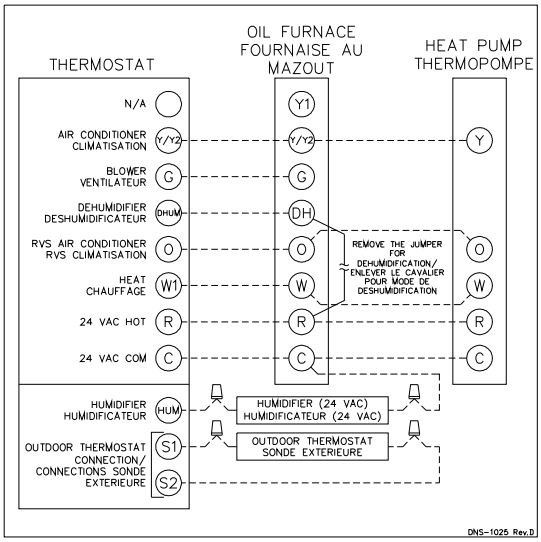

Note: On units with 2 stage cooling or heat pump, terminal Y1 must be used. When Y1 on the electronic control receives a 24 VAC signal, the air flow is reduced by 20%. Do not use terminal Y1 with a single stage cooling or heat pump.

2.5 INSTALLATION OF THE BURNER

Refer to the burner manufacturer's instructions. Also, the burner must be installed always in the same way independently of the furnace orientation.

1. Position the mounting gasket between the mounting flange and the burner mounting plate. Align the holes in the burner mounting plate with the studs on the mounting flange and bolt securely in place.
2. Remove the burner drawer assembly or the air tube assembly;
3. Install the nozzle (refer to Technical Specifications, (Table 6);
4. Check the electrode settings;
5. Make the electrical connections;
6. Complete oil line connections.

2.5.1 Nozzles

The burner comes equipped with an appropriate nozzle. However, if another size or a replacement nozzle is required, use the manufacturer's recommended spray angle and type a shown in Table 1 and based on a pump pressure of 100 psi.

Always select nozzle sizes by working back from the desired flow rate at operating pressure and not the nozzle marking.

2.5.2 Air and Turbulator Settings

Before starting the burner for the first time, adjust the air and turbulator settings to those listed in this manual. Once the burner becomes operational, final adjustments will be required. Refer to section 3 of this manual.

2.5.3 Post purge delay adjustment

The post purge delay on the oil-fired burners is factory set to zero second. This delay is applicable for all installations with chimney venting. For heating units installed with side wall venting and a burner equipped with this feature, the post purge delay must be set to 15 seconds. Refer to the burner control instruction manual and markings for proper adjustment of the post purge delay.

2.6 VENTING

WARNING

Poisonous carbon monoxide gas, fire and explosion hazard.

Read and follow all instructions in this section. Failure to properly vent this furnace can result in in death, bodily injury and/or property damage.

To ensure the safe and proper functioning of an oil furnace, it must always be connected to a flue with sufficient draft or to an approved side-wall venting system. In addition, it is strongly recommended to perform a complete inspection of all the existing venting systems.

WARNING

Poisonous carbon monoxide gas hazard.

Never install a hand operated damper in the vent pipe. However, any Underwriters Laboratories listed, electrically operated automatic type vent damper may be installed if desired. Be sure to follow the instructions provided with vent damper. Also, read and follow all instructions in this section of the manual.

Failure to properly vent this furnace or other appliances can result in death, bodily injury and/or property damage.

2.6.1 Masonry chimney

This furnace can be vented into an existing masonry chimney. However, the unit must not be vented into a chimney into which a solid fuel burning furnace is already being vented.

Before venting this furnace into a chimney, its condition must be checked and repairs made, if necessary. Also, the chimney lining and dimensions must conform to local and national codes.

2.6.2 Factory Built Chimneys

Oil fired furnaces are approved for use with “L” type vents. The unit may also be used with an approved chimney of proper dimensions and temperature ratings as specified in the installation code. Refer to chimney manufacturer’s instructions for proper installation.

2.6.3 Draft Regulator

This unit may be installed with or without a draft regulator. However, it is recommended that a draft regulator be installed in cases where the draft is either high or variable due to external conditions. Follow the instructions provided with the regulator.

2.6.4 Side-wall Venting

The heating unit is approved for side-wall venting. This system is comprised of a model VTK-098 / KLAVT0101DET side-wall venter and a 4” insulated vent pipe, model IFV098 / KLAFVxx01DET. Refer to the installation instructions provided with the venting system.

2.7 BLOCKED VENT SHUT-OFF DEVICE (BVSO) FOR CHIMNEY VENTING

CAUTION

It is imperative that this device be installed by a qualified service technician.

A positive pressure venting system (Sealed Combustion System or Direct Vent) **MUST NOT** use the BVSO. Follow the instructions supplied with the venting system.

This device is designed to detect the insufficient evacuation of combustion gases in the event of a vent blockage. In such a case the thermal switch will shut down the oil burner. The device will then need to be re-armed MANUALLY.

Refer to the detailed instructions and wiring diagrams supplied with the BVSO for the installation and wiring procedures. The length of wires supplied with the unit is such that the safety device must be installed between the flue outlet of the appliance and the draft regulator, as indicated in the instructions.

It is also essential that the BVSO be maintained annually. For more details refer to the instructions supplied with the device itself, as well as Section 3. of this Manual.

2.7.1 BVSO Performance Test

The purpose of the following test is to check that the electrical outlet on the furnace, designated to the BVSO, is functional.

1. Start up the burner;
2. Remove the three-pole plug from the BVSO outlet on the furnace;
3. The burner must shut-off immediately, while the blower continues to run to the end of the cool-down cycle.

If the test is not in line with the above, call a QUALIFIED SERVICE TECHNICIAN.

2.8 COMBUSTION AIR SUPPLY AND VENTILATION

WARNING

Poisonous carbon monoxide gas hazard.

Comply with NFPA 31 (U.S.) and CSA B139 (Canada) standards for the installation of Oil Burning Equipment and applicable provisions of local building codes to provide combustion and ventilation air.

Failure to provide adequate combustion and ventilation air can result in death, bodily injury and/or property damage.

Oil furnaces must have an adequate supply of combustion air. It is common practice to assume that older homes have sufficient infiltration to accommodate the combustion air requirement for the furnace. However, home improvements such as new windows, doors, and weather stripping have drastically reduced the volume of air infiltration into the home.

Refer to oil furnace installation codes relative to combustion and ventilation air requirements. Consult Section 2.2 in this manual, specifically for units installed in an enclosed space.

Home air exhausters are common. Bathroom and kitchen fans, power vented clothes dryers and water heaters all tend to create a negative pressure condition in the home. Should this occur the chimney becomes less and less effective and can easily downdraft. In certain cases, mechanically supplied air, by way of a blower, interlocked with the unit, is necessary. It is the installer’s responsibility to check that.

2.8.1 Contaminated Combustion Air

Installations in certain areas or types of structures will increase the exposure to chemicals or halogens that may harm the furnace. These conditions will require that only outside air be used for combustion.

The following areas or types of structures may contain or be exposed to certain substances, potentially requiring outside air for combustion:

a. Commercial buildings;
b. Buildings with indoor pools;
c. Furnaces installed near chemical storage areas.

Exposure to the following substances:

a. Permanent wave chemicals for hair;
b. Chlorinated waxes and cleaners;
c. Chlorine based swimming pool chemicals;
d. Water softening chemicals;
e. De-icing salts or chemicals;
f. Carbon tetrachloride;

g. Halogen type refrigerants;
h. Cleaning solvents (such as perchloroethylene);
i. Printing inks, paint removers, varnishes, etc. ;
j. Hydrochloric acid;
k. Solvent based glue;
l. Antistatic fabric softeners for clothes dryers;
m. Acid based masonry cleaning materials.

2.8.2 Burner with Outdoor Combustion Air Kit

Certain burners are designed to function with combustion air taken directly from the outside. Follow the instructions provided with the burner, the fresh-air supply kit or the side-wall venting kit.

2.9 OIL TANK

WARNING

Fire and explosion hazard.

Use only approved heating type oil in this furnace. DO NOT USE waste oil, used motor oil, gasoline or kerosene.

Use of these will result in death, bodily injury and/or property damage.

CAUTION

When a 0.75 USGPH or smaller nozzle is used, a 10 micron or finer filter, must be installed on the oil supply line to the furnace inside the building where the unit is located.

This is a requirement in order for the heat exchanger warranty to remain in force.

Check your local codes for the installation of the oil tank and accessories.

At the beginning of each heating season or once a year, check the complete oil distribution system for leaks.

Ensure that the tank is full of clean oil. Use No.1 or No.2 Heating Oil (ASTM D396 U.S.) or in Canada, use No.1 or No.2 Furnace Oil.

A manual shut-off valve and an oil filter shall be installed in sequence from tank to burner. Be sure that the oil line is clean before connecting to the burner. The oil line should be protected to eliminate any possible damage. Installations where the oil tank is below the burner level must employ a two-pipe fuel supply system with an appropriate fuel pump. A rise of 2.4 m (8') and more requires a two stage pump and a rise greater than 4.9 m (16') an auxiliary pump.

Follow the pump instructions to determine the size of pipe needed in relation to the rise or to the horizontal distance.

2.10 DUCTING

WARNING

Poisonous carbon monoxide gas hazard.

DO NOT draw return air from inside a closet or utility room. Return air MUST be sealed to the furnace casing.

Failure to properly seal ducts can result in death, bodily injury and/or property damage.

The ducting must be designed and installed according to approved methods, local and national codes as well as good trade practices.

When ducting supplies air to a space other than where the furnace is located, the return air must be sealed and also be directed to the space other than where the furnace is located.

2.10.1 Air filter

A properly sized air filter must be installed on the return air side of the unit. Refer to the Technical Specifications, Table 6 for the correct dimensions. Also refer to Section 2.2 and the instructions supplied with the filter.

2.11 SUPPLY AIR ADJUSTMENTS (4 SPEED MOTORS)

On units equipped with 4-speed blower motors, the supply air must be adjusted based on heating/air conditioning output and the static pressure of the duct system. For the desired air flow refer to the following table as well as the air flow tables based on static pressure in the Technical Specifications section of this manual.

Table 1: Blower speed adjustments, 4 speed motor

FURNACE APPLICATION	HEATING OR A/C OUTPUT	RECOMMENDED BLOWER SPEED
HEATING	0.68 USGPH	MED-LOW
	0.80 USGPH	MED-HIGH
A/C	2.0 TONS	LOW
	2.5 TONS	MED-LOW
	3.0 TONS	MED-HIGH
	3.5 TONS	HIGH

To effect the adjustment, the RED (for heating) and BLUE (for cooling and heat pump) wires can be changed on the motor. Also, refer to the position of the wires on the electronic board of the unit and consult the wiring diagrams. If the heating and air conditioning speeds are the same, the RED wire must be moved to “UNUSED LEADS” on the electronic board and the jumper provided with the BLUE wire must be used between the “HEAT” and “COOL” terminals.

The blower start/stop delays can be adjusted by positioning the DIP switches on the electronic board as shown in the following figures. The recommended blower ON delay is 60 seconds and blower OFF delay 2 minutes:

Figure 8: Blower start/stop delays, board #1158

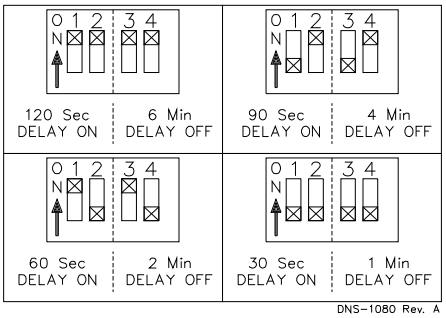

2.12 SUPPLY AIR ADJUSTMENTS (ECM VARIABLE SPEED MOTORS)

On units equipped with ECM variable speed blower motors, the air supply must be adjusted based on heating/air conditioning output. The start/stop delays of the blower must also be adjusted by positioning the DIP switches on the electronic board. Refer to the following tables, air flow Table 2 and the wiring diagram in this manual for the proper settings:

Table 2: Air adjustments, heating mode

SW1 – HEAT DIP Switch Positions			Input USGPH
1	2	POSITION	
OFF	OFF	A	0.68
ON	OFF	B	0.80
OFF	ON	C *	0.68
ON	ON	D *	0.80

* Alternate adjustment with higher temperature rise

Table 3: Airflow adjustments, air conditioning mode

SW2 – COOL DIP Switch Positions			Output Tons
1	2	POSITION	
OFF	OFF	A	3.5
ON	OFF	B	3.0
OFF	ON	C	2.5
ON	ON	D	2.0

Table 4: Airflow adjustments, all modes

SW3 – ADJ (Adjustment) DIP Switch Positions			CFM HTG. % increase or decrease	CFM A/C % increase or decrease
1	2	POSITION		
OFF	OFF	A	0%	0%
ON	OFF	B	+10%	+10%
OFF	ON	C	-10%	-10%
ON	ON	D	N/A	0%

Table 5: Delay adjustments, heating mode

SW4 – Delay DIP Switch Positions			Input USGPH
1	2	POSITION	
OFF	OFF	A	0.68
ON	OFF	B	0.80
OFF	ON	C	ALL
ON	ON	D	ALL

2.13 INSTALLATION OF ACCESSORIES

WARNING

Electrical shock hazard.

Turn OFF electrical power at the fuse box or service panel before making any electrical connections and ensure a proper ground connection is made before connecting line voltage.
Failure to do so can result in death or bodily injury.

2.13.1 Humidifier (HUM)

The 120 VAC HUM terminal on the electronic board of the blower is tied directly to terminal 8 of the 9-terminal connector of the electronic board. It supplies 120 VAC electric power when the burner is in operation.

A 24 VAC signal can also be supplied from the W and C terminals on the blower electronic board to activate a switching relay.

Also refer to the instructions supplied with the accessory.

2.13.2 Electronic Air Cleaner (EAC) (PSC Model)

The EAC terminal on the electronic board supplies 120 VAC when the blower is operating in the heating or air conditioning mode. This signal can be used to activate an electronic air cleaner that is not equipped with an air flow switch. If the cleaner is equipped with an air flow switch, the S terminal on the electronic board can be used to provide a constant supply of 120 VAC.

Also refer to the instructions supplied with the accessory.

2.13.3 Air Conditioner (or Heat Pump)

An air conditioning coil may be installed on the supply air side ONLY.

WARNING

Poisonous carbon monoxide gas hazard.

Install the evaporator coil on the supply side of the furnace ducting ONLY.

An evaporator coil installed on the return air side of the ducting can cause condensation to form inside the heat exchanger, resulting in heat exchanger failure. This in turn, can result in death, bodily injury and/or property damage.

A clearance of 15 cm (6") is required between the bottom of the coil drain pan and the top of the heat exchanger. If a heat pump is installed, a “dual-energy” thermostat, or other control is required, in order to prevent the simultaneous operation of the furnace and the heat pump.

It also prevents a direct transition from heating by way of the heat pump to heating with oil. Refer to the thermostat instructions or those of another control used for the proper wiring.

If a coil blower compartment is used, install air tight, motorized and automatic air dampers. Cold air coming from the coil and passing across the furnace can cause condensation and shorten the life of the heat exchanger.

3 OPERATION

3.1 START-UP

Before starting up the unit, be sure to check that the following items are in compliance:

1. The electrical installation, the oil supply system, the venting system, combustion air supply and ventilation;
2. The blower access door is in place and the blower rail locking screws are well tightened;
3. The Blocked Vent Shut-Off (BVSO) is installed according to instructions (for chimney venting);
4. The oil supply valve is open;
5. The burner ''Reset'' button is well pushed in or re-armed;
6. **The preliminary air adjustments on the burner** comply with the technical specifications in this manual;
7. The blower speed adjustments for heating and air conditioning are appropriate and according to the specifications in this manual;
8. The blower start/stop delays are satisfactory;
9. The thermostat of the room is in the heating mode and is set higher than the ambient temperature.

To start the unit, turn the main electrical switch on.

3.2 OPERATING SEQUENCE OIL HEATING MODE

1. The W-R contact closes;
2. The burner motor starts up to pre-purge the combustion chamber for a period of 10 to 15 seconds. During that time a spark is established on the electrodes;
3. The solenoid valve opens and a flame is established. Shortly after, the electrodes cease to spark;
4. Then the blower runs up to full speed. The delay depends on the adjustments that were made on the electronic board, which controls the blower motor. Refer to Sections 2.11 and 2.12, as well as the CFM table for more details.
5. When the call for heat is satisfied, the solenoid valve closes, the flame goes out and the burner motor stops (after post purge delay, if applicable).
6. The blower stops shortly after the burner. The delay depends on the adjustments that were made on the electronic board that controls the blower. Refer to Sections 2.11 and 2.12, as well as the CFM table for more details.

Note: A detailed operating sequence of the oil burner is outlined in the instructions provided with the burner.

3.3 CHECKS AND ADJUSTMENTS

3.3.1 Purging The Oil Line

Open the bleed port screw and start the burner. Allow the oil to drain into a container for at least 10 seconds. The oil should flow absolutely free of white streaks or air bubbles to indicate that no air is being drawn into the suction side of the oil piping and pump. Slowly close and tighten the bleed screw. Once closed, the flame will light up.

3.3.2 Pressure Adjustment

The oil pressure must be adjusted according to the Technical Specifications of this manual. An adjustment screw and a connection for a pressure gauge are located on the oil pump for that purpose. Also refer to the burner instruction manual.

3.3.3 Combustion Check

IMPORTANT

The heat exchanger metal surfaces may have oil and the baffle insulation also contains binders. These products will burn or evaporate when the unit operates for the first time. Because of that, the smoke reading may be skewed during the first minutes of operation. Therefore, the unit must operate during at least 60 minutes before taking any readings to adjust the combustion quality. Let the unit cool down before making any adjustments.

IMPORTANT

The combustion check verification MUST be performed after the nozzle replacement or the burner cleaning. After these manipulations, the combustion parameters are necessarily modified. Refer also to the burner instruction manual.

1. Pierce a test hole in the flue pipe, approximately 18 inches from the furnace breech. Insert the smoke test probe into the hole. For installation using a sidewall venting, use the orifice provided on the breech plate;
2. From a cold start, let the unit operate for about 5 minutes;
3. Set the burner air setting until you have between 0 and 1 on the Bacharach Scale (or a “trace”);
4. Take a CO_2 sample at the same test location where the #1 smoke reading was taken and make note of it. Example: 13.8% of CO_2 or 2.5% of O_2;
5. Adjust the burner air setting to obtain a CO_2 reading 1.5% lower (or a O_2 reading 2.0% higher) than the reading associated with the “trace” of smoke. Example: 12.3% of CO_2 or 4.5% of O_2;
6. This method of adjusting the burner will result in clean combustion (Bacharach smoke scale between 0 and a trace) and ensure the proper functioning of the system. The optimum CO_2 level is around 12% to 13% (or 3.5% to 5.0% of O_2).

3.3.4 Draft Regulator Adjustment

On chimney installations only, a barometric draft regulator (supplied with the furnace) must be installed, in order to ensure proper draft through the furnace. The barometric damper must be mounted with the hinge pins in a horizontal position and the face of the damper vertical for

proper functioning (see instructions included with the damper.) After the furnace has been firing for at least five minutes, the draft regulator should be set to between -0.025" and -0.060" W.C.

3.3.5 Overfire Pressure Test

The overfire draft that is taken through the observation port, located above the burner, is a measurement necessary to determine if there is a blockage in the heat exchanger or the flue pipe. Refer to the Technical Specifications in this manual for overfire pressure values. A high pressure condition may be caused by excessive combustion air, due to the air band being too wide open, or a lack of flue draft (chimney effect) or some other blockage, such as soot in the secondary section of the heat exchanger or the use of an oversize nozzle input or high pressure pump.

3.3.6 Vent Temperature Test

1. After having adjusted the burner combustion, insert a thermometer into the test hole in the breech pipe;
2. The total vent temperature should be between 204 and 302℃ (400 and 575℉). If not, check for improper a ir temperature rise, pump pressure, nozzle size or a badly sooted heat exchanger.

3.3.7 Supply Air Temperature Rise Test

1. Operate the burner for at least 10 minutes;
2. Measure the air temperature in the return air plenum;
3. Measuring the air temperature in the largest trunk coming off the supply air plenum, just outside the range of radiant heat from the heat exchanger. 0.3 m (12") from the plenum of the main take-off is usually sufficient;
4. The temperature rise is calculated by subtracting the return air temperature from the supply air temperature;
5. If the temperature rise is lower or exceeds the temperature specified in Table 6, change to the next lower or higher blower speed tap, until the temperature rise falls to the target. If the excessive temperature rise cannot be increased or reduced by changing fan speed, investigate for ductwork obstructions, dirty or improper air filter, improper firing caused by improper pump pressure or nozzle sizing.

3.3.8 Limit Control Check

After operating the furnace for at least 15 minutes, restrict the return air supply by blocking the filters or the return air register and allow the furnace to shut off on High Limit. The burner will shut off but the blower will continue to run.

Remove the obstruction and the burner should restart after a few minutes. The time required for the restart also depends on the adjustment of the blower “OFF” delay.

3.3.9 Restart After Burner Failure

1. Set the thermostat lower than room temperature;
2. Press the reset button on the burner primary control (relay);
3. Set the thermostat higher than room temperature;
4. If the burner motor does not start or ignition fails, turn off the disconnect switch and CALL A QUALIFIED SERVICE TECHNICIAN.

CAUTION

Do not attempt to start the burner when excess oil has accumulated, when the furnace is full of vapour or when the combustion chamber is hot.

4 MAINTENANCE

WARNING

Electrical shock hazard.

Turn OFF power and fuel to the furnace before any disassembly or servicing.

Failure to do so can result in death, bodily injury and/or property damage.

Preventive maintenance is the best way to avoid unnecessary expense and inconvenience. Have your heating system and burner inspected by a qualified service technician at regular intervals.

To maintain the reliability and optimal performance of the furnace, have a complete combustion check done after the annual maintenance call. Do not attempt to repair the furnace or its controls. Call a qualified service technician.

Before calling for repair service check the following points:

1. Check the oil tank gauge and make sure that the valve is open;
2. Check fuses and the circuit breaker;
3. Check if the main disconnect switch is ON ;
4. Set the thermostat above room temperature;
5. If ignition does not occur, turn off the disconnect switch and call a qualified service technician.

When ordering replacement parts, please specify the complete furnace model number and serial number.

4.1 CLEANING THE HEAT EXCHANGER

It is not generally necessary to clean the heat exchanger or flue pipe every year, but it is advisable to have the oil burner service technician check the unit before each heating season to determine whether the cleaning or replacement of parts is necessary.

If a cleaning is necessary, the following steps should be performed:

1. Turn OFF all utilities upstream from the furnace;
2. Disconnect the flue pipe;
3. Remove the flue collar panel located at the front of the furnace;
4. Remove the heat exchanger baffles;
5. Disconnect the oil line and remove the oil burner;
6. Clean the secondary tubes and the primary cylinder with a stiff brush and a vacuum cleaner;
7. Before re-assembling the unit, the heat exchanger and combustion chamber should be inspected to determine if replacement is required;

8. After the cleaning replace the heat exchanger baffles, flue collar plate and oil burner;
9. Readjust the burner for proper operation.

4.2 CLEANING THE BLOCKED VENT SHUT-OFF DEVICE (BVSO)

For continuous safe operation, the Blocked Vent Shut-off device (BVSO) must be inspected and maintained annually by a qualified service technician.

1. **Disconnect power to the appliance;**
2. Remove the two screws holding on the BVSO assembly cover;
3. Remove the cover;
4. Remove the two screws holding the control box to the heat transfer tube assembly. Sliding the control box in the appropriate direction will unlock it from the heat transfer tube assembly;
5. Carefully remove any build-up from the thermal switch surface;

CAUTION

Do not dent or scratch the surface of the thermal switch. If the thermal switch is damaged it MUST be replaced.

6. Clean and remove any build-up or obstruction inside the heat transfer tube;
7. Re-mount, lock and fasten the control box with the 2 screws removed in step 4;
8. Re-attach the assembly cover with the screws removed in step 2;
9. Re-establish power to the unit.

4.3 CHANGING OF THE BURNER HEAD

Once annually, remove the retention head and electrodes from the drawer assembly and remove all foreign matter, if necessary. Also clean the extremity of the burner tube, if necessary.

4.4 CHANGING THE NOZZLE

Change the nozzle once a year with the one specified in Table 6.

4.5 CHANGING THE OIL FILTER

Tank Filter

The tank filter should be changed as required. Follow the manufacturer's instructions.

Secondary Filter

The 10 micron, or finer, filter cartridge should be changed annually. Follow the manufacturer's instructions.

4.6 CHANGING THE AIR FILTER

Dirty filters have an impact on the efficiency of the furnace and increase fuel consumption.

Air filters should be changed at least once a year. Very dusty conditions, the presence of animal hair and the like will require more frequent changing or cleaning.

5 FURNACE INFORMATION

Model: _____ Serial number: _____

Furnace installation date: _____

Service telephone #-Day: _____ Night: _____

Dealer name and address: _____

_____

_____

START-UP RESULTS

Nozzle: _____ Pressure: _____ lb/po^2

Burner adjustments: Primary air _____

Fine air _____

Drawer Assembly _____

CO_2 : _____ % Smoke scale: _____ (Bacharach)

Gross stack temperature: _____ ℉

Ambient temperature: _____ ℉

Chimney draft : _____ " W.C.

Overfire draft : _____ " W.C.

Test performed by: _____

Table 6: Technical Specifications

112 Series, multi-position models	UNITS 1/2 HP 4-SPEED MOTOR		UNITS WITH 1/2 HP ECM MOTOR	
RATING AND PERFORMANCE				
Firing rate (USGPH)*	0.68	0.80	0.68	0.80
Input (BTU/h)*	95 200	112 000	95 200	112 000
Maximum Heating capacity, (BTU/h)*	81 000	94 000	81 000	94 000
Heating temperature rise (Degr. F)*	55 - 75 Degr. F		60 - 72 Degr. F	
Flue draft with chimney (inch of w.c.)	-0.06 to -0.025		-0.06 to -0.025	
Overfire pressure with chimney (inch of w.c.)	-0.035 to +0.025		-0.035 to +0.025	
Flue pressure with direct vent (inch of w.c. - no wind)	+0.03 to +0.15		+0.03 to +0.15	
Overfire pressure with direct vent (inch of w.c. - no wind)	+0.05 to +0.17		+0.05 to +0.17	
BECKETT BURNER; MODEL NX (Chimney or DV)	**NX56LQ**		**NX56LQ**	
Burner tube insertion length (inches)	1 3/4''		1 3/4"	
Head type	6 - Slot LQ head		6 - Slot LQ head	
Nozzle (Delavan)	0.60 - 60A	0.70 - 60A	0.60 - 60A	0.70 - 60A
Pump pressure (PSIG)*	130	130	130	130
Head/Air setting	1.5	2.5	1.5	2.5
AFUE % (From CSA B212 standard and Canadian regulation)**	85.5 ‡	85.0 ‡	85.5 ‡	85.0 ‡
AFUE % (From ASHRAE 103 standard and US regulation)**	85.2 ‡	85.0 ‡	85.2 ‡	85.0 ‡
RIELLO BURNER; MODEL 40-F3 (Chimney)	**F3 WITH AIR INLET DAMPER**		**F3 WITH AIR INLET DAMPER**	
Burner tube insertion length (inches)	2 3/4''		2 3/4"	
Nozzle (Delavan)	0.60 - 70A	0.70 - 70A	0.60 - 70A	0.70 - 70A
Pump pressure (PSIG)*	130	130	130	130
Combustion air adjustment (turbulator/damper)	1 / 2.6	2 / 3.1	1 / 2.6	2 / 3.1
AFUE % (From CSA B212 standard and Canadian regulation)**	85.5 ‡	85.0 ‡	85.5 ‡	85.0 ‡
AFUE % (From ASHRAE 103 standard and US regulation)**	85.2 ‡	85.0 ‡	85.2 ‡	85.0 ‡
RIELLO BURNER; MODEL 40-BF5 (Direct vent DV)	**BF5**		**BF5**	
Burner tube insertion length (inches)	2 3/4''		2 3/4"	
Nozzle (Delavan)	0.60 - 70A	0.70 - 70A	0.60 - 70A	0.70 - 70A
Pump pressure (PSIG)*	130	130	130	130
Combustion air adjustment (turbulator/damper)	0 / 2.75	0 / 3.25	0 / 2.75	0 / 3.25
AFUE % (From CSA B212 standard and Canadian regulation)**	85.5 ‡	85.0 ‡	85.5 ‡	85.0 ‡
AFUE % (From ASHRAE 103 standard and US regulation)**	85.2 ‡	85.0 ‡	85.2 ‡	85.0 ‡
ELECTRICAL SYSTEM				
Volts - Hertz - Phase	115 - 60 - 1		115 - 60 - 1	
Rated current (Amps)	12.6		10.3	
Minimum ampacity for wire sizing (Amps)	15.2		12.2	
Max. fuse size (Amps)	20		15	
Control transformer (VA)	40		40	
External control power available Heating (VA)	40		40	
Cooling (VA)	30		30	
BLOWER DATA				
Heating blower speed at 0.25" W.C. SP	MED-LOW	MED-HIGH	See the ECM air flow table	
Heating blower speed at 0.50" W.C. SP	MED-LOW	MED-HIGH		
Motor (HP) / number of speeds	1/2 HP / 4 speeds		1/2 HP / ECM	
Blower size (diam. x width)	10'' x 10'' (tight housing)		10'' x 10" (tight housing)	
GENERAL INFORMATION				
Overall dimensions (width x depth x height)	21 3/4'' x 25 3/4'' x 41 1/2''		21 3/4'' x 25 3/4" x 41 1/2"	
Supply air opening (width x depth)	17 3/4'' x 18 3/4''		17 3/4" x 18 3/4"	
Return air opening (width x depth)	23'' x 19"		23" x 19''	
Filter size	24'' x 20" x 1"		24'' x 20'' x 1"	
Shipping weight Lbs/Kg	153 Lbs / 70 Kg		153 Lbs / 70 Kg	
Air conditioning, maximum output (tons) at 0.5" W.C. SP	3.5		3.5	

*** INPUT & OUTPUT ADJUSTMENT:**
- **Pump pressure can be adjusted to maintain proper firing rate.**
- **Increase pump pressure if flue gases temperature is under 400˚F**
- **Adjust the <u>total</u> flue gas temperature between 400˚ and 575˚F (330˚ and 505˚ F <u>net</u> approx.)**

**** AFUE value established after minimum 20 hours of operation.**

‡ =

Table 7: Airflow Data, models with 1/2 HP, ECM motors

OIL HEATING MODE 24 VAC input (R) on W only				
SW1- HEAT DIP switch position	HEAT INPUT (USGPH)	CFM with SW3-ADJ DIP switch position A	CFM with SW3-ADJ DIP switch position B	CFM with SW3-ADJ DIP switch position C
A (1=OFF, 2=OFF)	0,68	1160	1310	990
B (1=ON, 2=OFF)	0,80	1340	1400	1140
C (1=OFF, 2=ON)*	0,68	1000	1130	850
D (1=ON, 2=ON)*	0,80	1160	1310	990

CONTINUOUS FAN 24 VAC input (R) on G only				
SW2- COOL DIP switch position	A/C size (TON)	CFM with SW3-ADJ DIP switch position A	CFM with SW3-ADJ DIP switch position B	CFM with SW3-ADJ DIP switch position C
A (1=OFF, 2=OFF)	3,5	1050	1210	895
B (1=ON, 2=OFF)	3,0	900	1035	765
C (1=OFF, 2=ON)	2,5	750	865	640
D (1=ON, 2=ON)	2,0	600	690	510

COOLING OR HEAT PUMP HEATING MODE 24 VAC input (R) to G, Y/Y2 and O (for cooling)				
SW2- COOL DIP switch position	A/C size (TON)	CFM with SW3-ADJ DIP switch position A	CFM with SW3-ADJ DIP switch position B	CFM with SW3-ADJ DIP switch position C
A (1=OFF, 2=OFF)	3,5	1400	1400	1260
B (1=ON, 2=OFF)	3,0	1200	1320	1080
C (1=OFF, 2=ON)	2,5	1000	1100	900
D (1=ON, 2=ON)	2,0	800	880	720
In Cooling - Dehumidification mode, with no 24 VAC input to DH, the CFMs are reduced by 15% The CFMs shown are reduced by 20% if there is 24 VAC input to Y1 (first stage cooling mode)				

DELAY PROFILE FOR OIL HEATING MODE				
SW4- DEALY DIP switch position	HEAT INPUT (USGPH)	PreRun On-Delay CFM Level - Time	ShortRun On-Delay CFM Level - Time	Off-Delay CFM Level - Time
A (1=OFF, 2=OFF)	0,68	13% - 45 sec.	19% - 60 sec	38% - 3 min.
B (1=ON, 2=OFF)	0,80	13% - 45 sec.	19% - 30 sec	38% - 3 min.
C (1=OFF, 2=ON)	All	13% - 45 sec.	100% - 0 sec	100% - 2 min.
D (1=ON, 2=ON)	All	13% - 90 sec.	100% - 0 sec	100% - 2 min.
PreRun and ShortRun are the periods of time when the the blower starts at very low CFM to minimize the distributon of cool air in the system and then runs up to normal speed. Off Delay is the time required to cool down the heat exchanger with low CFMs, to minimize cool draft in the air distribution system.				

DELAY PROFILE FOR COOLING OR HEAT PUMP HEATING MODE				
No adjustment required	A/C size	PreRun On-Delay CFM Level - Time	ShortRun On-Delay CFM Level - Time	Off-Delay CFM Level - Time
-	All	NO DELAY	NO DELAY	100% - 90 sec

* Alternate adjustment in oil-fired heating mode with higher temperature rise

Table 8: Airflow Data, model with 1/2 HP 4 speed motor

BLOWER SPEED	EXTERNAL STATIC PRESSURE WITH AIR FILTER					
	0.2" (W.C.)	0.3" (W.C.)	0.4" (W.C.)	0.5" (W.C.)	0.6" (W.C.)	0.7" (W.C.)
HIGH	1550	1510	1460	1400	1320	1220
MED-HIGH	1320	1280	1240	1200	1160	1020
MED-LOW	1180	1150	1110	1080	1040	940
LOW	1070	1040	1010	980	910	840

Table 9: Minimum clearances from combustible material

LOCATION		UPFLOW	HORIZONTAL	DOWNFLOW
SIDES	FURNACE [1]	2.54 cm (1")	N/A	5.08 cm (1")
	PLENUM AND WARM-AIR DUCT WITHIN 6 ft. OF FURNACE [1]	5.08 cm (2")	2.54 cm (1")	5.08 cm (2")
BOTTOM	FURNACE [2]	Ø	2.54 cm (1") [3]	5.08 cm (2") [4]
BACK	FURNACE (OPPOSITE SIDE OF THE BURNER) [1]	7.62 cm (3")	7.62 cm (3")	7.62 cm (3")
TOP	PLENUM OR HORIZONTAL WARM-AIR DUCT WITHIN 6 ft. OF FURNACE [2]	5.08 cm (2")	7.62 cm (3")	5.08 cm (2")
	FURNACE [2]	N/A	5.08 cm (2")	N/A
FLUE PIPE	AROUND FLUE PIPE	22.86 cm (9")	22.86 cm (9")	22.86 cm (9")
FRONT	FURNACE (BURNER SIDE) [1]	45.72 cm (18")	45.72 cm (18")	45.72 cm (18")

[1] These are horizontal dimensions

[2] These are vertical dimensions

[3] This dimension can be obtained by using Horizontal Flow Base # HFB-101 or # KLASB0701DET

[4] This dimension can be obtained by using Downflow Base # DFB-103 or # KLASB0901DET

Figure 9: Furnace Dimensions

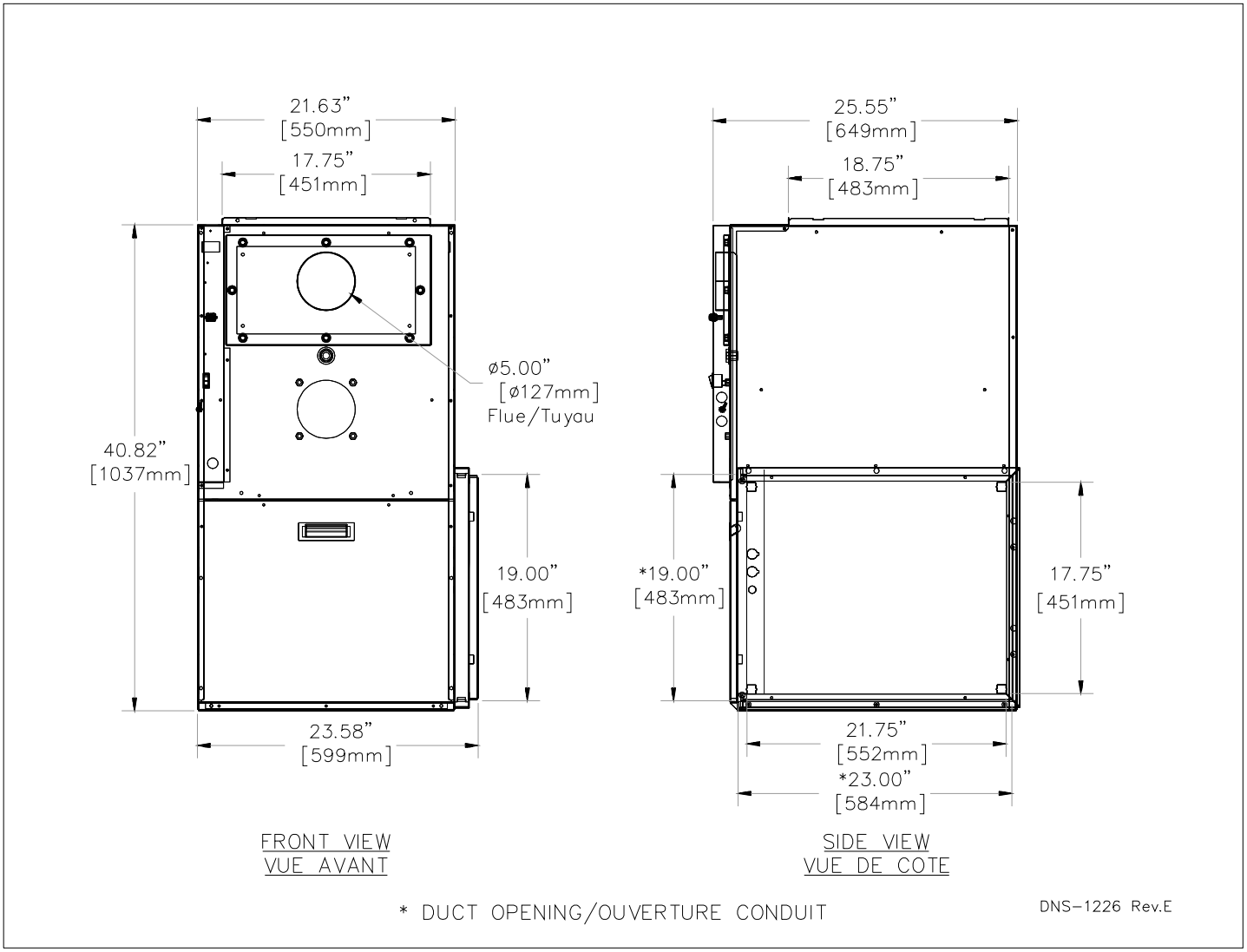

Figure 10: Wiring Diagram 4 Speed Motor (PSC)

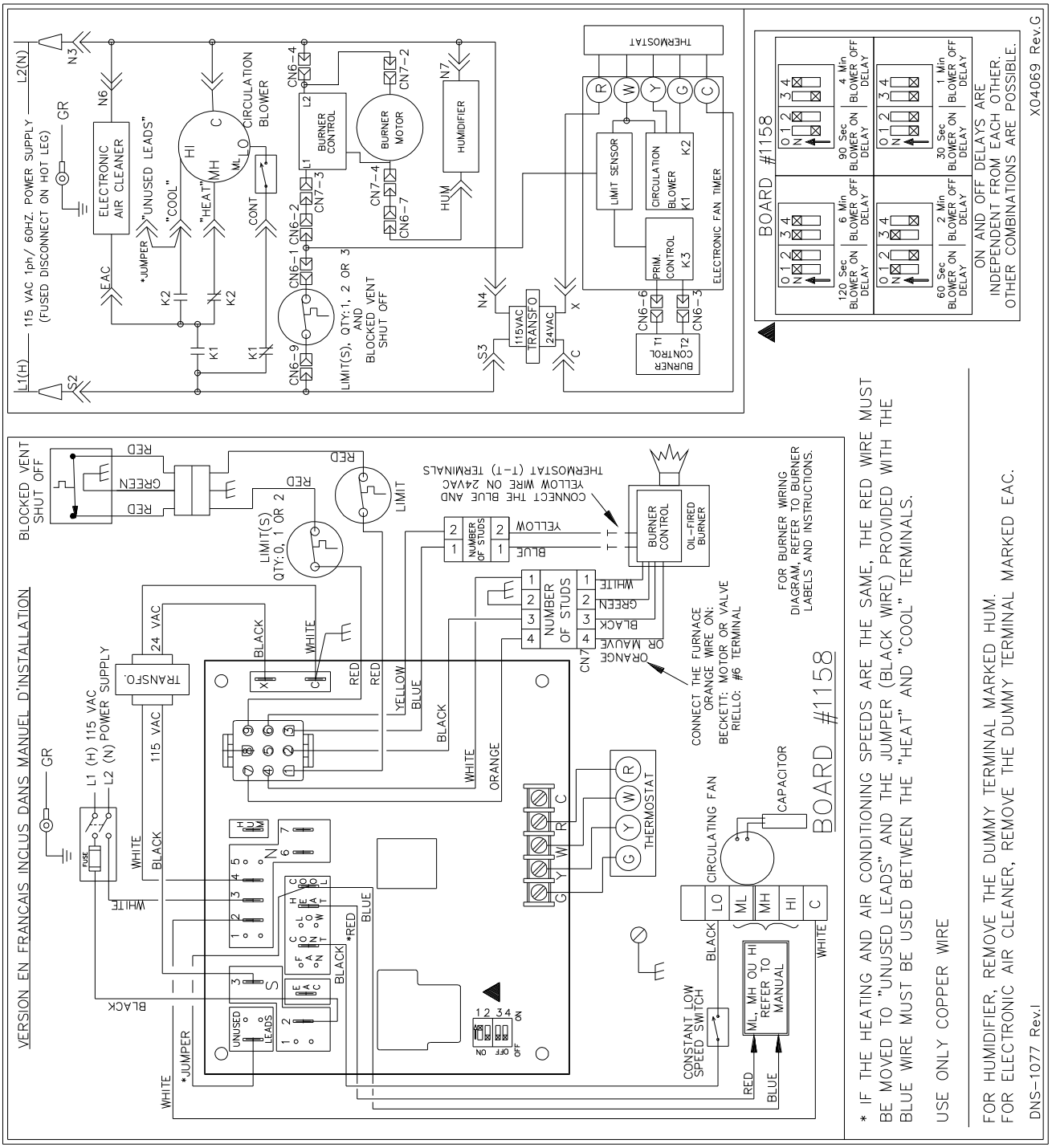

Figure 11: Wiring Diagram Variable Speed Motor (ECM)

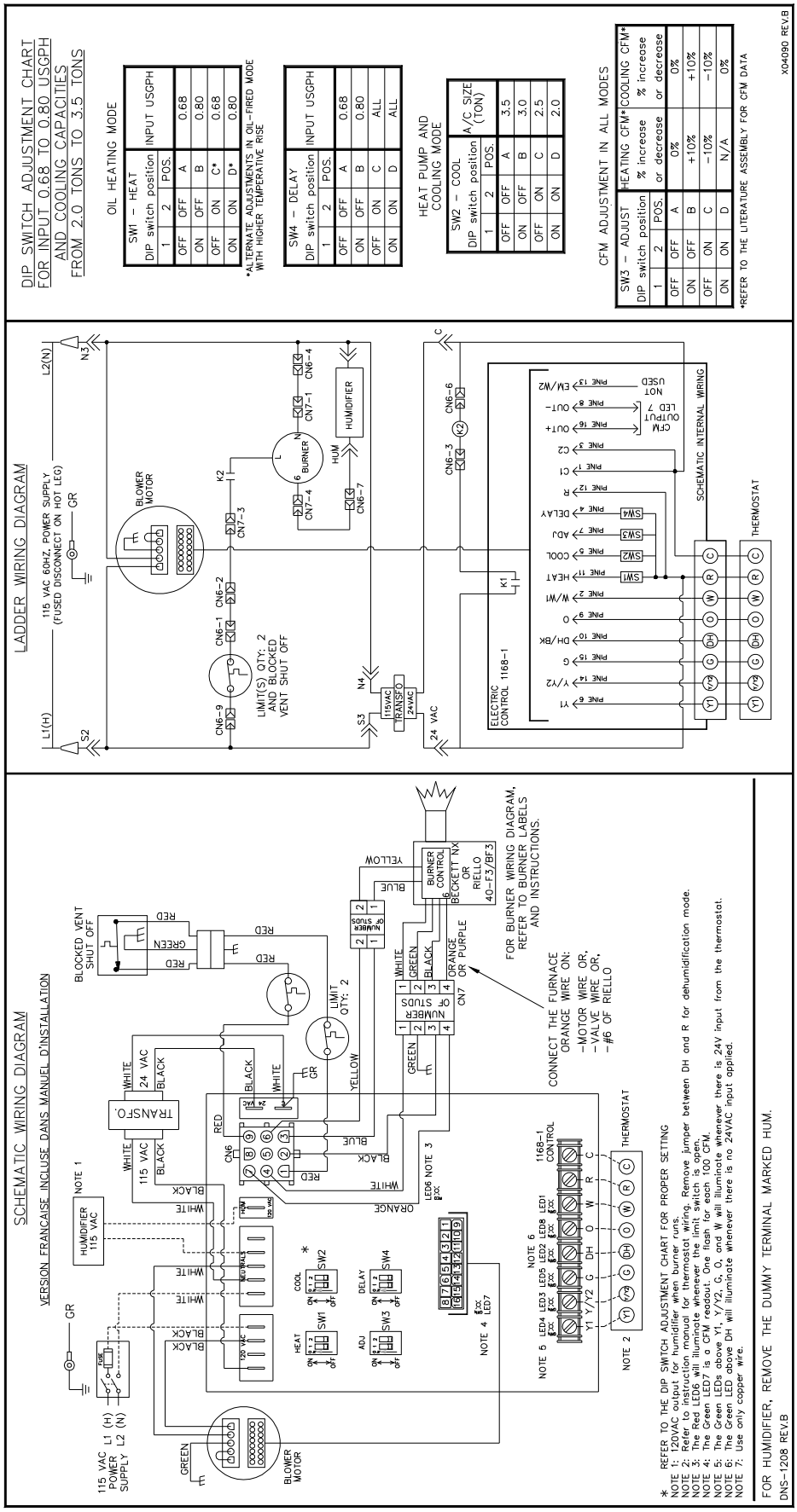

Figure 12: Parts list with 4 speed motor (PSC)

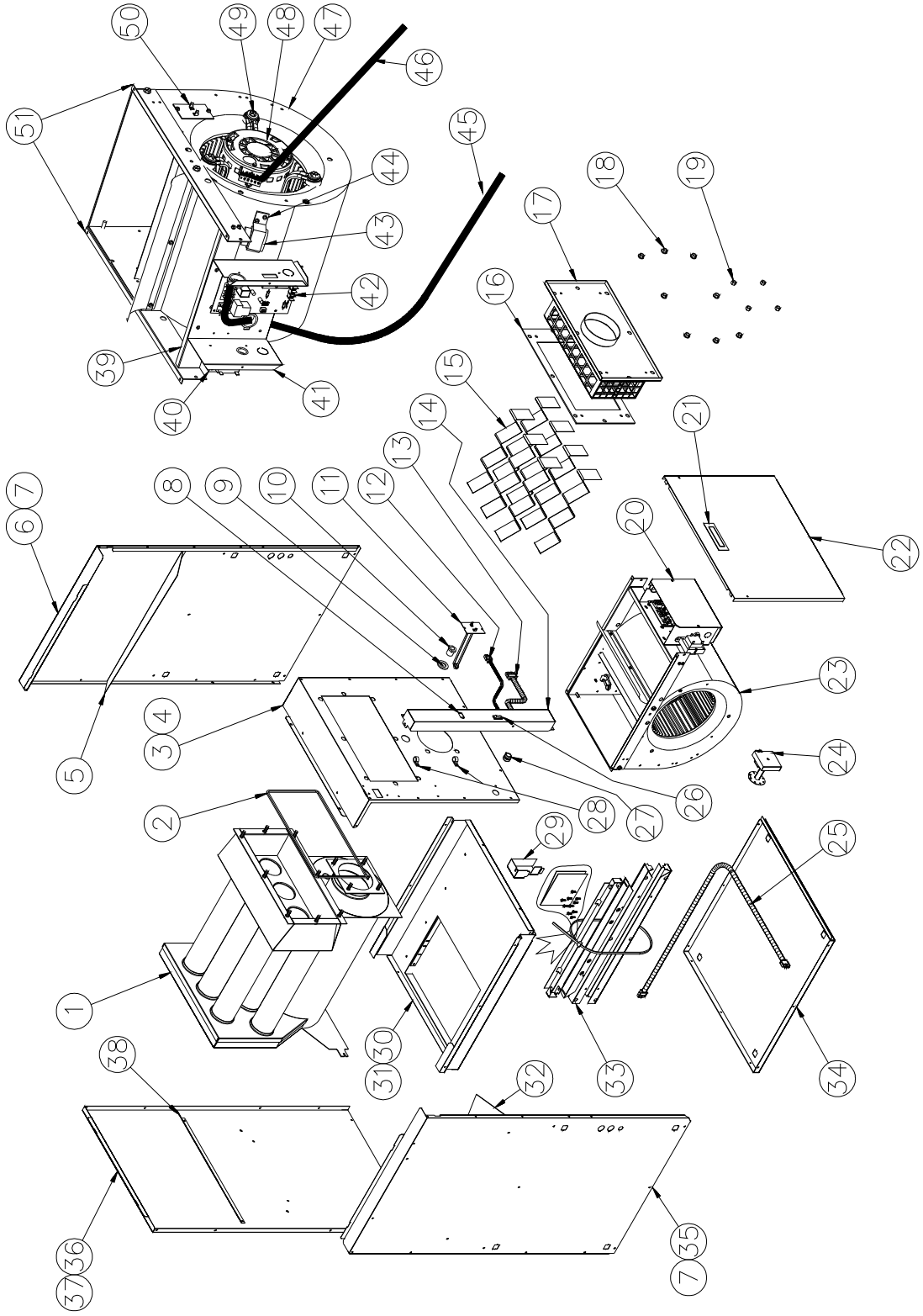

Table 10: Parts list with 4 speed motor (PSC)

ITEM	PART #	DESCRIPTION	COMMENTS
1	B03622	HEAT EXCHANGER	Heat exchanger only
2	J06L002	SEAL STRIP, DIA 1/8 x 25'	
3	B03652-01	FRONT PANEL ASSEMBLY	Panel, insulation and labels included
4	B03667	FRONT PANEL INSULATION	
5	B03637-01	BAFFLE, LATERAL	
6	B03651-01	SIDE PANEL ASSEMBLY (RIGHT)	Panel, insulation and baffle included
7	B03666	SIDE PANEL INSULATION	
8	B03455-01	ELECTRICAL KIT, BVSO INT.	
9	F06F015	WASHER, ZINC 1 7/16"	
10	Z99F061	OBSERVATION PORT	
11	R02R004	HIGH LIMIT 195-30F, 7"	
12	B03453	ELECTRICAL KIT, TT	
13	B03454	ELECTRICAL KIT, BURNER	
14	B03639	WIRE CHANNEL (BVSO/SWITCH)	
15	B03630-01	BAFFLE	One baffle included
16	B03675	SMOKE OUTLET GASKET	
17	B03662	RADIATOR BAFFLE	Item # 16 included
18	F07O001	FLANGE NUT, HEXAGONAL 3/8-16NC BRASS	
19	F07F011	HEX NUT 3/8-16NC ZINC	
20	B01684	COVER, ELECTRICAL BOX	
21	Z99F050	HANDLE , RECESSED BLACK	
22	B03654-01	BLOWER DOOR ASSEMBLY	Door and labels included
23	B03680-02	REPLACEMENT BLOWER ASSEMBLY	Blower, motor included
24	Z06G001	BLOCKED VENT SHUT-OFF BVSO-225	
25	B03118-01	ELECTRICAL KIT, BVSO EXT.	
26	L07F003	ROCKER SWITCH, DPST	
27	L04I013	STRAIN RELIEF BUSHING	
28	L04J001	CABLE CLAMP, 9/16" WHITE	
29	B03640	WIRE CHANNEL, INT.	
30	B03636	BLOWER DIVIDER	
31	B30513	BLOWER SLIDE	One blower slide included
32	B03637-02	LATERAL BAFFLE	
33	B03480-01	FILTER RACK KIT	
34	B03635	FLOOR	
35	B03651-02	SIDE PANEL ASSEMBLY (LEFT)	Panel, insulation and baffle included
36	B03653	REAR PANEL ASSEMBLY	Panel, insulation and baffles included
37	B03665	REAR PANEL INSULATION	
38	B03638	REAR BAFFLE	
39	B01682	SUPPORT, ELECTRONICS BOX	
40	L01F009	TRANSFORMER, 120-24Volt, 40VA	
41	B01683	ELECTRICAL BOX	
42A	R99G004	ELECTRONIC BOARD, UTEC 1158-110	
42B	R99G002	ELECTRONIC BOARD, HONEYWELL ST9103A	
43	L01I002	CAPACITOR 7,5 MF	
44	B01024	CAPACITOR HOLDER	
45	B03669	ELECTRICAL KIT, BOARD	
46	B03668-01	ELECTRICAL KIT, BLOWER	
47	B03720-04	BLOWER ASSEMBLY WITH LABEL	Housing, wheel and label included
48	L06H004	MOTOR 1/2 HP 4V DD	
49	B01888	MOTOR SUPPORT ASSEMBLY	Legs, band & hardware included
50	R02R007	HIGH LIMIT 120-20F, 1.75"	
51	B03641	BLOWER SLIDE	One blower slide included
		ACCESSORIES	
DFB-103 KLASB0901DET		DOWNFLOW BASE	B03464-02
HFB-101 KLASB0701DET		HORIZONTAL FLOW BASE	B00488-01
VTK-098 KLAVT0101DET		VENT TERMINAL KIT 4"	For sealed combustion
IFV-098-10 KLAFV0101DET		4" INSULATED FLEX VENT 10ft	For sealed combustion (B02551-09)
IFV-098-20 KLAFV0201DET		4" INSULATED FLEX VENT 20ft	For sealed combustion (B02551-10)
N01J052 KLABR0201BEC		BECKETT NX BURNER (0.60-60A NOZZLE)	
N01F051 KLABR0301RLO		RIELLO 40-F5 BURNER (0.60-70A NOZZLE)	
N01F052 KLABR0401RLO		RIELLO 40-BF5 BURNER (0.60-70A NOZZLE)	For sealed combustion
B03789		PROTECTION PLATE BURNER NX	For down flow instalation only

Figure 13: Parts list with variable speed motor (ECM)

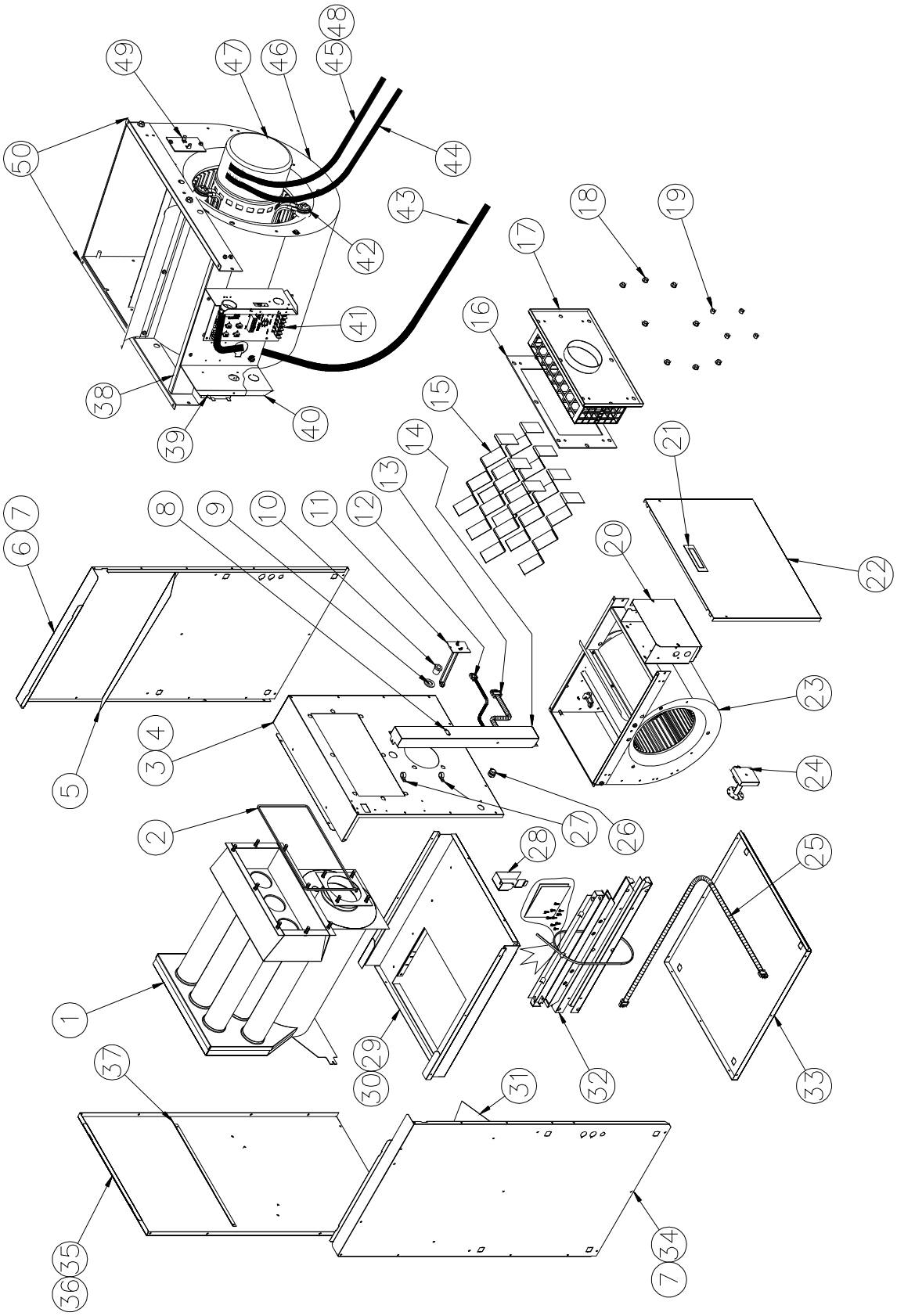

Table 11: Parts list with variable speed motor (ECM)

ITEM	PART #	DESCRIPTION	COMMENTS
1	B03622	HEAT EXCHANGER	Heat exchanger only
2	J06L002	SEAL STRIP, DIA 1/8 x 25'	
3	B03652-01	FRONT PANEL ASSEMBLY (RIGHT)	Panel, insulation and labels included
4	B03667	FRONT PANEL INSULATION	
5	B03637-01	BAFFLE, LATERAL	
6	B03651-01	SIDE PANEL ASSEMBLY	Panel, insulation and baffle included
7	B03666	SIDE PANEL INSULATION	
8	B03455-01	ELECTRICAL KIT, BVSO INT.	
9	F06F015	WASHER, ZINC 1 7/16"	
10	Z99F061	OBSERVATION PORT	
11	R02R004	HIGH LIMIT 195-30F, 7"	
12	B03453	ELECTRICAL KIT, TT	
13	B03454	ELECTRICAL KIT, BURNER	
14	B03642	WIRE CHANNEL (BVSO)	
15	B03630-01	BAFFLE	One baffle included
16	B03675	SMOKE OUTLET GASKET	
17	B03662	RADIATOR BAFFLE	Item # 16 included
18	F07O001	FLANGE NUT, HEXAGONAL 3/8-16NC BRASS	
19	F07F011	HEX NUT 3/8-16NC ZINC	
20	B01684	COVER, ELECTRICAL BOX	
21	Z99F050	HANDLE , RECESSED BLACK	
22	B03654-01	BLOWER DOOR ASSEMBLY	Door and labels included
23	B03680-02	REPLACEMENT BLOWER ASSEMBLY	Blower, motor included
24	Z06G001	BLOCKED VENT SHUT-OFF BVSO-225	
25	B03118-01	ELECTRICAL KIT, BVSO EXT.	
26	L04I013	STRAIN RELIEF BUSHING	
27	L04J001	CABLE CLAMP, 9/16" WHITE	
28	B03640	WIRE CHANNEL, INT.	
29	B03636	BLOWER DIVIDER	
30	B30513	BLOWER SLIDE	One blower slide included
31	B03637-02	LATERAL BAFFLE	
32	B03480-01	FILTER RACK KIT	
33	B03635	FLOOR	
34	B03651-02	SIDE PANEL ASSEMBLY (LEFT)	Panel, insulation and baffle included
35	B03653	REAR PANEL ASSEMBLY	Panel, insulation and baffles included
36	B03665	REAR PANEL INSULATION	
37	B03638	REAR BAFFLE	
38	B01682	SUPPORT, ELECTRONICS BOX	
39	L01F009	TRANSFORMER, 120-24Volt, 40VA	
40	B01683	ELECTRICAL BOX	
41	R99G003	ELECTRONIC BOARD, UTEC 1168	
42	B01888	MOTOR SUPPORT ASSEMBLY	Legs, band and hardware included
43	B03669	ELECTRICAL KIT, BOARD	
44	B03242	ELECTRONIC KIT, BLOWER	
45	B03243	ELECTRICAL KIT, BLOWER	
46	B03720-04	BLOWER ASSEMBLY WITH LABEL	Housing, wheel and label only
47	B03811-07	MOTOR 1/2 HP ECM	
48	N/A	MOTOR MODULE ECM	
49	R02R007	HIGH LIMIT 120-20F, 1.75"	
50	B03641	BLOWER SLIDE	One blower slide included
		ACCESSORIES	
DFB-103 KLASB0901DET		DOWNFLOW BASE	B03464-02
HFB-101 KLASB0701DET		HORIZONTAL FLOW BASE	B00488-01
VTK-098 KLAVT0101DET		VENT TERMINAL KIT 4"	For sealed combustion
IFV-098-10 KLAFV0101DET		4" INSULATED FLEX VENT 10ft	For sealed combustion (B02551-09)
IFV-098-20 KLAFV0201DET		4" INSULATED FLEX VENT 20ft	For sealed combustion (B02551-10)
N01J052 KLABR0201BEC		BECKETT NX BURNER (0.60-60A NOZZLE)	
N01F051 KLABR0301RLO		RIELLO 40-F5 BURNER (0.60-70A NOZZLE)	
N01F052 KLABR0401RLO		RIELLO 40-BF5 BURNER (0.60-70A NOZZLE)	For sealed combustion
B03789		PROTECTION PLATE BURNER NX	For down flow instalation only

B50092D