INSTALLATION INSTRUCTIONS
Apartment Fan Coil
Product Family: FSA2X, FSA4X

These instructions must be read and understood completely before attempting installation.

Safety Labeling and Signal Words

DANGER, WARNING, CAUTION, and NOTE

The signal words **DANGER, WARNING, CAUTION,** and **NOTE** are used to identify levels of hazard seriousness. The signal word **DANGER** is only used on product labels to signify an immediate hazard. The signal words **WARNING, CAUTION,** and **NOTE** will be used on product labels and throughout this manual and other manuals that may apply to the product.

DANGER – Immediate hazards which **will** result in severe personal injury or death.

WARNING – Hazards or unsafe practices which **could** result in severe personal injury or death.

CAUTION – Hazards or unsafe practices which **may** result in minor personal injury or product or property damage.

NOTE – Used to highlight suggestions which **will** result in enhanced installation, reliability, or operation.

Signal Words in Manuals

The signal word **WARNING** is used throughout this manual in the following manner:

⚠ WARNING

The signal word **CAUTION** is used throughout this manual in the following manner:

⚠ CAUTION

Signal Words on Product Labeling

Signal words are used in combination with colors and/or pictures on product labels.

TABLE OF CONTENTS

Introduction 2
Check Equipment 2
Location 2
Installation . . . . . 2 – 5
Electrical Connections . . . . . 5 – 6
Controls 6
Motor Speed Selection 7
Start–up Procedures 7
Care and Maintenance 7

⚠ WARNING

DEATH, PERSONAL INJURY, AND/OR PROPERTY DAMAGE HAZARD

Failure to carefully read and follow this warning could result in equipment malfunction, property damage, personal injury and/or death.

Installation or repairs made by unqualified persons could result in equipment malfunction, property damage, personal injury and/or death.

The information contained in this manual is intended for use by a qualified service technician familiar with safety procedures and equipped with the proper tools and test instruments.

Installation must conform with local building codes and with the National Electrical Code NFPA70 current edition.

INTRODUCTION

FSA Fan Coils may be used for cooling or heat pump operation, with or without electric heat. Models are available with factory installed electric heaters (5 kW, 7.5 kW, or 11 kw) and with no heat. Installations without electric heat require a Cooling Control Kit (accessory part number AMWK001CK).

FSA Fan Coils are designed to be installed in an **upflow position, free air return ONLY,** suitable for closet or flush-mount installations.

NOTE: Local codes may limit application of systems without a ducted return to single story dwellings.

All models have a factory installed and appropriately sized hard shut-off TXV metering device for use with R-22 (FSA2X) or R410A (FSA4X) refrigerant.

⚠ CAUTION

PRODUCT DAMAGE HAZARD

Failure to follow this caution may result in product damage.

This Fan Coil has a hard shut-off TXV metering device. A compressor Hard Start Kit is REQUIRED in all applications where the matching outdoor unit has a single-phase reciprocating compressor.

CHECK EQUIPMENT

Unpack Fan Coil and move to final location. Remove carton, taking care not to damage Fan Coil. Inspect equipment for damage prior to installation. File claim with shipping company if shipment is damaged or incomplete.

Locate rating plate on Fan Coil. It contains information needed to properly install Fan Coil. Check rating plate to be sure Fan Coil matches job specifications.

LOCATION

Select the best position which suits the installation site conditions. The location should provide adequate structural support, space in the front of the unit for service access, clearance for return air and supply duct connections, space for refrigerant piping connections and condensate drain line connections. If heaters are being installed, make sure adequate clearance is maintained from supply duct work. See “Clearances” in Figure 1.

If the Fan Coil is located in an area of high humidity, nuisance sweating of casing may occur. On these installations, a wrap of 2” fiberglass insulation with a vapor barrier is recommended.

An access panel is provided on the front of the cabinet for simple access to blower assembly and electrical controls. Minimum clearance of 21” in front of access panel is required for service.

INSTALLATION

Fan coil is designed for free-air return, such as enclosed in a closet with louvered door or flush mounted in a wall. Factory-authorized louvered grille kits are available for flush mount applications (accessory part number AMWK001WG for sizes 18, 24 & 30; accessory part number AMWK002WG for size 36).

In Closet

When Fan Coil is installed in a closet with a louvered door in return-air path, the free area of louvered opening in the door must be a minimum of 2.25 ft^2. Either align door opening with Fan Coil inlet or provide a 10” clearance between door and Fan Coil.

Flush Mount

If Fan Coil is to be flush mounted in a wall, provide adequate support underneath base of unit. Make sure Fan Coil is level or top tilting slightly forward to assure proper condensate drainage.

Hanging Cabinet

Cabinet may by hung from the wall using accessory brackets (accessory part number AMWK001MK). Use 1x4 or 2x4 wood piece across studs for support at top of cabinet and same size wood for spacer at bottom of cabinet. Position bottom spacer between cabinet and wall so that it holds the Fan Coil out from the wall in a vertical position. Refer to Figure 2.

⚠ CAUTION

PROPERTY DAMAGE HAZARD

Failure to follow this caution may result in property damage

When hanging cabinet, both wall support and spacer must be the same thickness or the unit will not hang correctly and Condensate Water will not drain correctly. Fan Coil must be vertical or top tilted slightly forward (accessory bracket creates slight tilt) .

Figure 1 Clearances and Dimensions

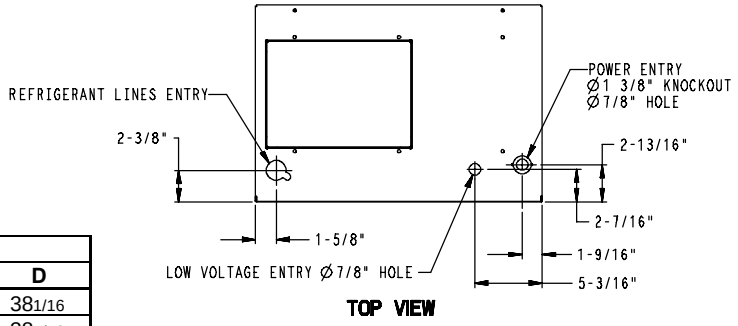

DIMENSIONAL DATA					
Model Size		A	B	C	D
FSA2X FSA4X	18	15 3/16	8 1/4	2 3/4	38 1/16
	24	15 3/16	8 1/4	2 3/4	38 1/16
	30	15 3/16	8 1/4	2 3/4	38 1/16
	36	18 3/8	9 1/4	5	43 3/16

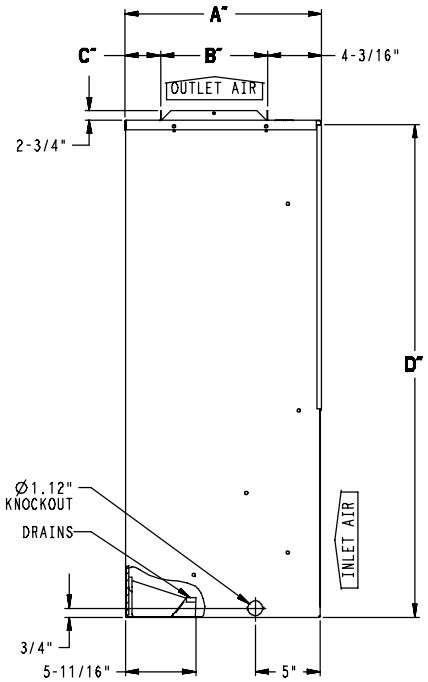

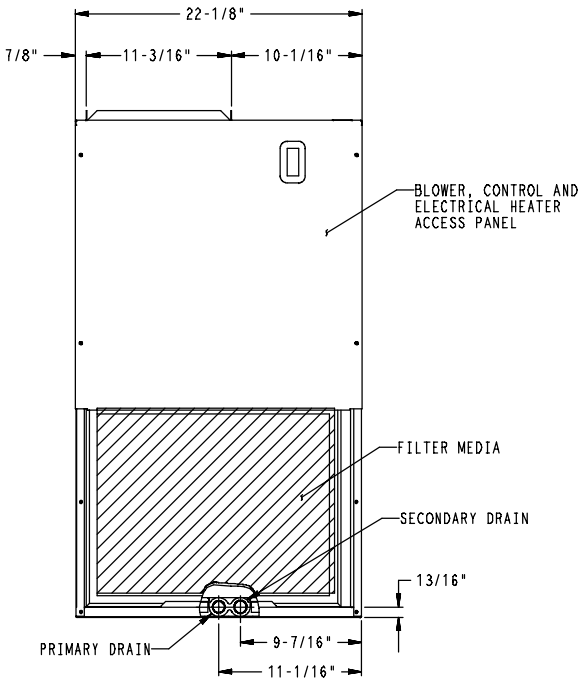

CLEARANCES	
No Heaters	
All Sides	0"
From Supply Duct	0"
From Front (for Service)	21"
With Heaters	
All Sides	0"
From First 3 feet of Supply Duct to Combustibles	1"
From Supply Duct after 3 feet	0"
From Front (for Service)	21"

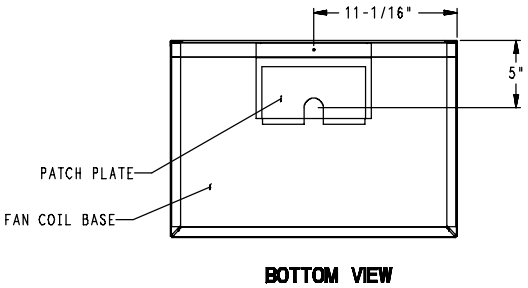

Figure 2	Hanging Cabinet on Wall

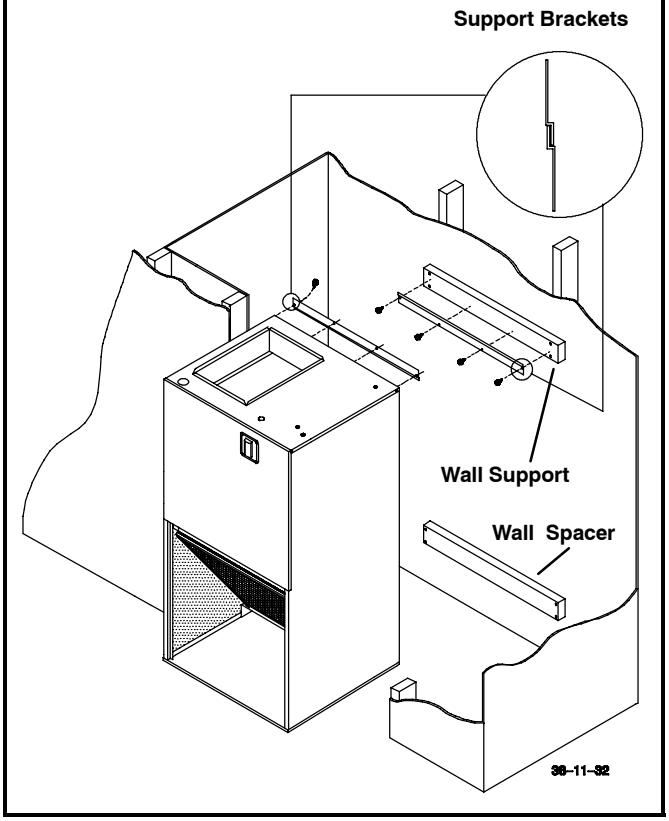

Duct Connections

Connect supply-air duct over 3/4" flange provided on supply-air opening. Secure duct to flange using applicable fasteners for type of duct used, and seal duct-to-unit joint.

NOTE: Short duct runs tend to increase noise level.

When fan coil is equipped with an electric heater, install air ducts in accordance with standards 90A and 90B of National Fire Protection Association (NFPA). Use of flexible connectors between ductwork and Fan Coil will prevent transmission of vibration.

When electric heater is installed, use heat-resistant material for a flexible connector between ductwork and Fan Coil air discharge connection.

Ductwork passing through unconditioned space must be insulated and covered with a vapor barrier.

NOTE: Fan Coil is intended for non-ducted return-air applications. Local codes may limit this unit to single-level applications.

⚠ WARNING

FIRE HAZARD

Failure to maintain proper clearances could result in personal injury, death, and/or property damage.

When heaters are installed, maintain clearances from combustible materials as specified on unit rating plate. Do not use plastic lined or combustible flexible ducting within 36 inches of the supply end of the fan coil.

Condensate Drain

Condensate pan has primary and secondary drain connections to meet FHA requirements (refer to Figure 3). These connections have 3/4" female pipe threads (NPT).

Tubing for all condensate drains should be a minimum of 7/8" OD. Drain lines from condensate pan to exterior of unit must be plastic pipe. Drain should be pitched downward at a slope of 1 inch per 10 feet.

If coil is located in or above a living space where damage may result from condensate overflow, a separate 3/4" drain must be provided from secondary drain connection. Run this drain to a place in compliance with local installation codes where it will be noticed when unit is operational.

Condensate flowing from secondary drain indicates a plugged primary drain.

Install a 3". trap in condensate drain line as close to coil as possible. Make sure that the top of trap is below connection to drain pan to prevent condensate from overflowing drain pan. Prime trap with water. Insulate drain if located above a living area and test condensate line for leaks.

Consult local codes for additional restrictions or precautions.

Figure 3	Condensate Drain

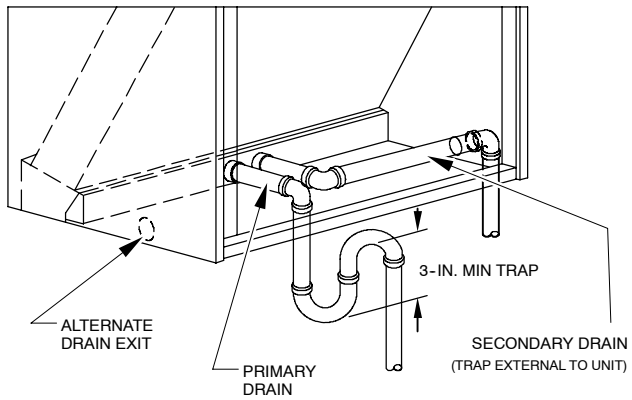

NOTE: Use plastic pipe from condensate pan to exterior of fan coil.

A86005

Refrigerant Lines

NOTE: Do not remove seals from coil until tubing connections are ready to be made. See instructions packaged with outdoor unit for connecting refrigerant tubes.

Move Fan Coil into place and install refrigerant tubing as follows:

1. Route tubing to connection points.
2. Remove plugs from liquid and suction tubes.
3. Clean tubing and braze in place.
4. Pressurize system and leak test. Repeat procedure until leak free.

ELECTRICAL CONNECTIONS

⚠ WARNING

ELECTRICAL SHOCK HAZARD

Failure to turn off the main (remote) disconnect device before working on incoming (field) wiring could result in personal injury or death.

Incoming (field) wires on the line side of the disconnect found in the fan coil unit remain live, even when the pull-out is removed. Service and maintenance to incoming (field) wiring cannot be safely performed until the main disconnect switch (remote to the unit) is turned off.

NOTE: Before proceeding with electrical connections, make certain that voltage, frequency, and phase correspond to that specified on rating plate. Also, check to be sure that the service provided by utility is sufficient to handle additional load imposed by this equipment. Refer to unit wiring label for proper field high-voltage and low-voltage wiring. Make all electrical connections in accordance with NEC and any local codes or ordinances that might apply. Fan Coil must have a separate branch electrical circuit. The Cooling Control Kit and the heater packages provide a disconnect switch located within sight and readily accessible to the unit.

NOTE: All control kits are shipped from factory wired for 230V transformer operation. When 208V transformer operation is required, move the black primary lead from the 230V terminal to the 208V terminal.

Refer to Figure 1 for location of the electrical inlets. Refer to unit rating plate for minimum circuit ampacity (MCA) and maximum fuse or circuit breaker (maximum over-current protection - MOCP).

1. Provide power supply for Fan Coil in accordance with unit wiring diagram and rating plate.
2. Connect line-voltage leads to field lugs. Use copper wire only.
3. Use UL listed conduit and conduit connector for connecting line-voltage leads to unit and obtaining proper ground. Grounding can also be accomplished by using the ground lug provided in the control box.
4. Install rubber grommet packed with unit in hole for low-voltage wires.
5. Connect low-voltage leads to thermostat and outdoor unit. Refer to Figures 4 and 5 and the outdoor unit wiring label.

Use No. 18 AWG color-coded, insulated (35 °C minimum) wire to make low-voltage connections between thermostat and Fan Coil. If thermostat is located more than 100 feet from Fan Coil as measured along low-voltage wire, use No. 16 AWG color-coded, insulated (35 °C minimum) wire. All control kits from the factory utilize a printed-circuit board (PCB) which has a low voltage circuit protective fuse (5 amp), fan motor speed tap selection terminal (SPT), and time delay relay (TDR) jumper. To disable the TDR feature, sever the jumper wire JW1.

⚠ WARNING

ELECTRICAL SHOCK HAZARD

Failure to establish uninterrupted or unbroken ground could result in personal injury or death.

According to NEC, ANSI/NFPA 70, and local codes, the cabinet must have an uninterrupted or unbroken ground in order to minimize potential for personal injury or death if an electrical fault should occur. The ground may consist of electrical wire or metal conduit when installed in accordance with existing electrical codes. If conduit connection uses reducing washers, a separate ground wire must be used.

Figure 4 Low Voltage – Air Conditioner

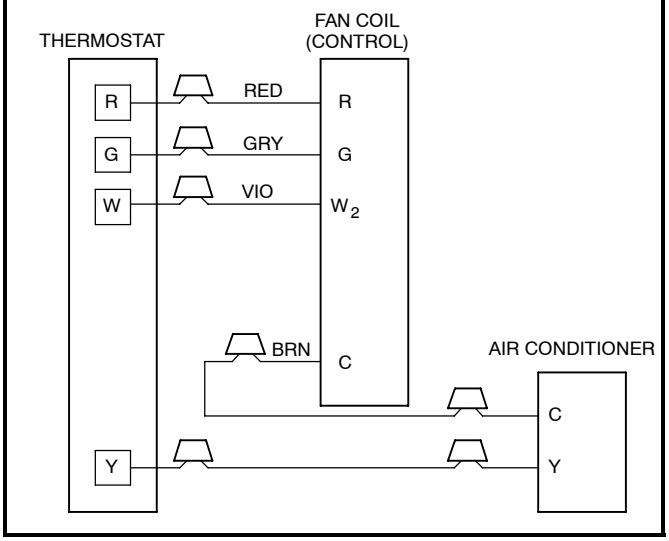

Figure 5 Low Voltage – Heat Pump

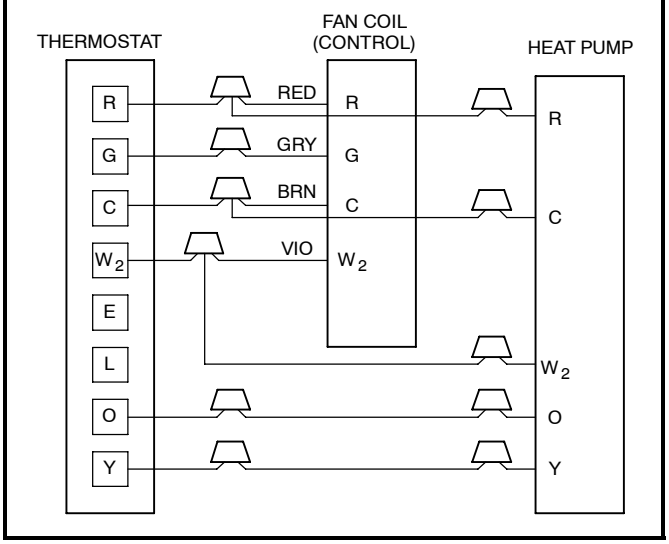

CONTROLS

Fan Coils shipped from factory without heaters require a field-installed cooling control kit or heater. These kits are completely assembled and factory-wired for easy installation.

See Installation Instructions packaged with heaters for installation procedures. When installing accessory heat, optional cooling control kit is not required.

Install Cooling Control Kit (accessory part number AMWK001CK) when heater is not present:

1. Remove blower access panel (refer to Figure 6).
2. Install cooling control panel above blower motor on blower side plate. Attach with provided screws.
3. Route thermostat leads through small knockout in top of unit. Use grommet provided with cooling control to protect leads where they pass through casing.
4. Make low-voltage splice connections in low-voltage control box.
5. Route blower motor power leads up through hole in bottom of cooling control. Connect yellow common wire to piggy-back common terminal on transformer. Connect black (HI) or red (LOW) speed tap wire to control board relay common terminal (SPT). Refer to wiring label for proper speed tap selection.
6. Route unit power supply through knockout in top of unit and connect to line side of disconnect. Connect ground wire to ground lug. Refer to wiring label before making connections.
7. Remove disconnect pullout.
8. Replace blower access panel.
9. Replace disconnect pullout.

Figure 6 Cooling Control Kit

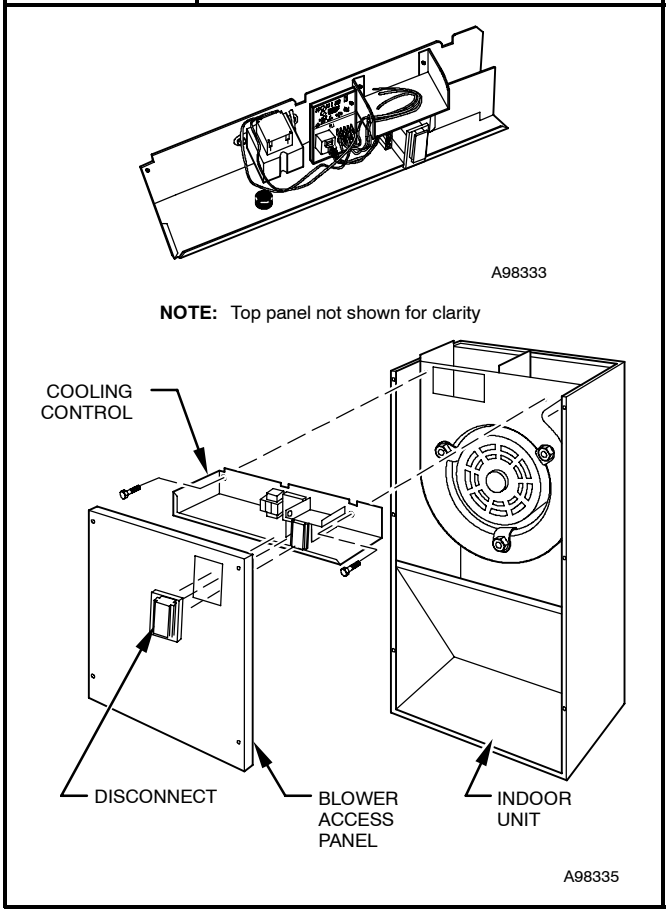

MOTOR SPEED SELECTION

Before operating Fan Coil, be sure that proper blower speed has been selected. High speed tap is recommended for most applications. For those applications requiring lower air flows, low speed tap can be used.

Color Code For Motor Lead Wires

MOTOR SPEED TAP	WIRE COLOR
C – Common	Yellow
1 – High	Black
2 – Low	Red

NOTE: Fan speeds are selected manually. To change the fan speed, switch the black and red fan motor leads on printed circuit board terminal SPT (COM).

START-UP PROCEDURE

Refer to outdoor unit Installation Instructions for system start-up instructions and refrigerant charging method details.

CARE AND MAINTENANCE

The system should be regularly inspected by a qualified service technician. Consult the servicing dealer for recommended frequency.

Between visits, the only consumer service recommended or required is air filter maintenance and condensate drain operation.

Air Filter

Inspect air filters at least monthly and replace or clean as required. Disposable type filters should be replaced. Reusable type filters may be cleaned by soaking in mild detergent and rinsing with cold water. Install filters with the arrows on the side pointing in the direction of air flow.

Condensate Drain

During the cooling season check at least monthly for free flow of drainage and clean if necessary.

⚠ CAUTION

PRODUCT DAMAGE HAZARD

Failure to follow this caution may result in poor unit performance and/or product damage.

Never operate Fan Coil without a filter. Damage to blower motor or coil may result. Factory authorized filter kits must be used when locating the filter inside the unit.