INSTALLATION INSTRUCTIONS

AXB160LAA - Accessory 10° Low-Ambient Kit

Used On: PGE / PAE180

These instructions must be read and understood completely before attempting installation.

Package Contents

Item	Qty.
Temperature Switch *	1
Temperature Switch**	1
No. 6B, 3/4 in. (19mm) Long Screw	4
20 in. (500 mm), 16 gage (4.5 mm diameter) yellow wire with quick connect terminals.	4

*This switch has a 45 F (7.2 C) break point and a 55 F (12.8 C) make point.
** This switch has a 15 F (-9.4 C) break point and a 25 F (-3.9 C) make point.

Safety Considerations

Installation, start-up, and servicing of this equipment can be hazardous due to system pressures, electrical components, moving parts, and equipment location.

Only trained, qualified installers and service mechanics should install, start up, and service this equipment. Untrained personnel can perform such basic maintenance functions as cleaning coils or replacing air filters. All other operations should be performed by trained service personnel only.

When working on equipment, observe precautions in literature; tags, stickers, and labels attached to equipment; and any other safety precautions that apply. Follow all safety codes, and wear safety glasses and work gloves. Use care in handling, rigging, and setting bulky equipment.

WARNING

Before performing service or maintenance operations on unit, turn off main power switch to unit. Electrical shock could result in personal injury.

General

IMPORTANT: This low-ambient kit is designed for large rooftop units equipped with 3 single-phase outdoor-fan motors.

This accessory package sequences outdoor fans to control head pressure at low outdoor ambient temperatures from 45 to 20 F (7.2 to -6.7 C) depending on the application. Outdoor fan no. 3 sequences off at 45 F (7.2 C) outdoor ambient and outdoor fan no. 2 sequences off at 15 F (-9.4 C) outdoor ambient. Outdoor fan no. 1 runs between 15 F (-9.4 C) and 0 F (-17.8 C) outdoor ambient.

The sequencing is accomplished by two bi-metal switches mounted in the control box. This accessory package can be used on 208/230, 400, 460, and 575 v units.

Before Installing

Inspect the contents of this accessory package before installing. File a claim with the shipper if contents are damaged or parts are missing.

INSTALLATION:

Step 1 - Install Wind Baffles

Wind baffles must be field fabricated for all units to ensure proper cooling cycle operation at low-ambient temperatures. See Fig. 1 for baffle details. Use 20-gage (4.1-mm diameter) galvanized sheet metal or similar corrosion-resistant materials for the baffles.

CAUTION

Use extreme care when drilling screw holes and screwing in fasteners near outdoor coil to avoid damage to tubing.

Use field-supplied screws to attach baffles to the unit. Screws should be 1 /4-in. (6-mm) diameter or larger. Drill required screw holes for mounting baffles.

Step 2 - Install Temperature Switches

1. Turn off power to unit.
2. Open control box door. Using a voltage meter, check that no power is present at unit terminal block.
3. Identify outdoor fan capacitors 1, 2, and 3. See Fig. 2 for capacitor locations. Capacitors can be identified by the wire label markings at the capacitor terminals.
4. Cut the 6-in. (150-mm) long yellow leads between capacitors 1 and 2 and between capacitors 2 and 3 as shown in Fig. 3. Multiple wires are crimped under one quick-connect terminal, so it is necessary to cut the leads as close to the quick-connect terminal ends as possible.
5. Remove the knockouts provided in the bottom of the control box.
6. With four no. 6B screws provided, install temperature switches on inside bottom of control box. Be sure switches are mounted over knockouts removed in Step 5. Screw holes are provided in the control box near the control circuit terminal block.
7. Connect four 20-in. (500-mm) yellow wires provided to the 2 temperature switches (one wire on each terminal). These wires have quick-connect terminals so they can be easily connected between the capacitors and the temperature switches (see Fig. 3).
8. Connect the 45 F (7.2 C) temperature switch between capacitors 2 and 3 (in place of the 6-in. [150-mm] yellow wire removed in Step 4) using the other ends of the 2 yellow wires attached to the switch in Step 7.
9. Connect the 15 F (-9.4 C) temperature switch between capacitors 1 and 2 (in place of the 6-in. [150-mm] yellow wire removed in Step 4) using the other ends of the 2 yellow wires attached to the switch in Step 7.
10. Replace panels and turn on power to unit.

Figure 2 - Outdoor Fan and Capacitor Location

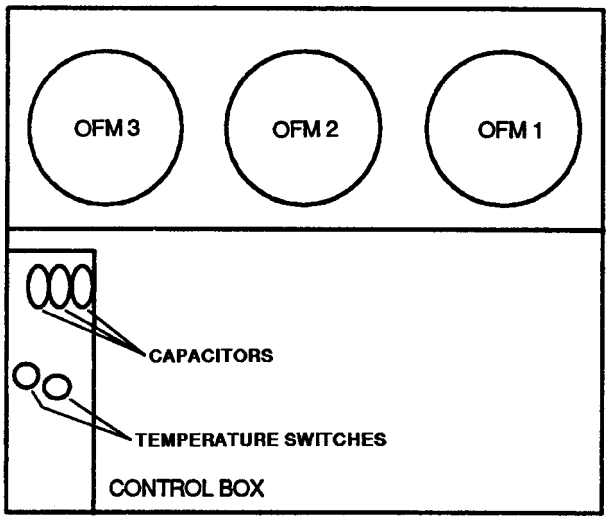

OFM — Outdoor-Fan Motor

Figure 1 - Wind Baffle Details

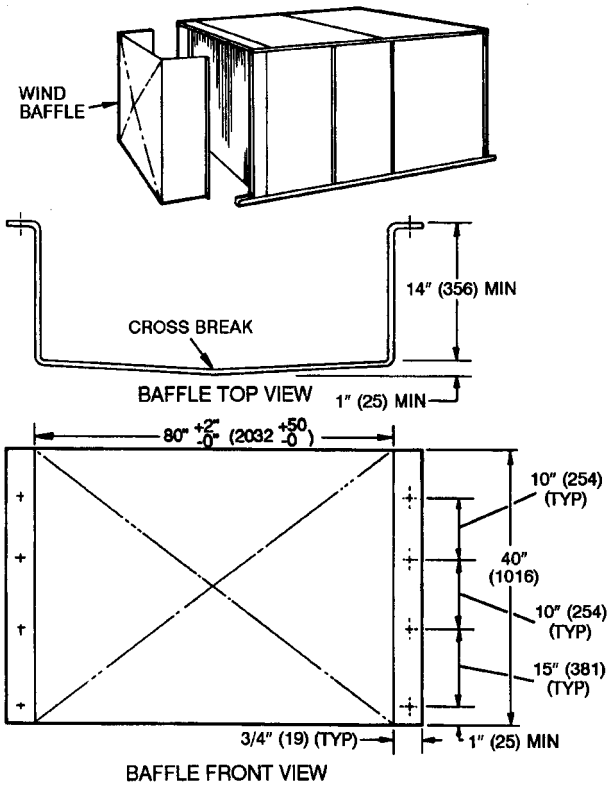
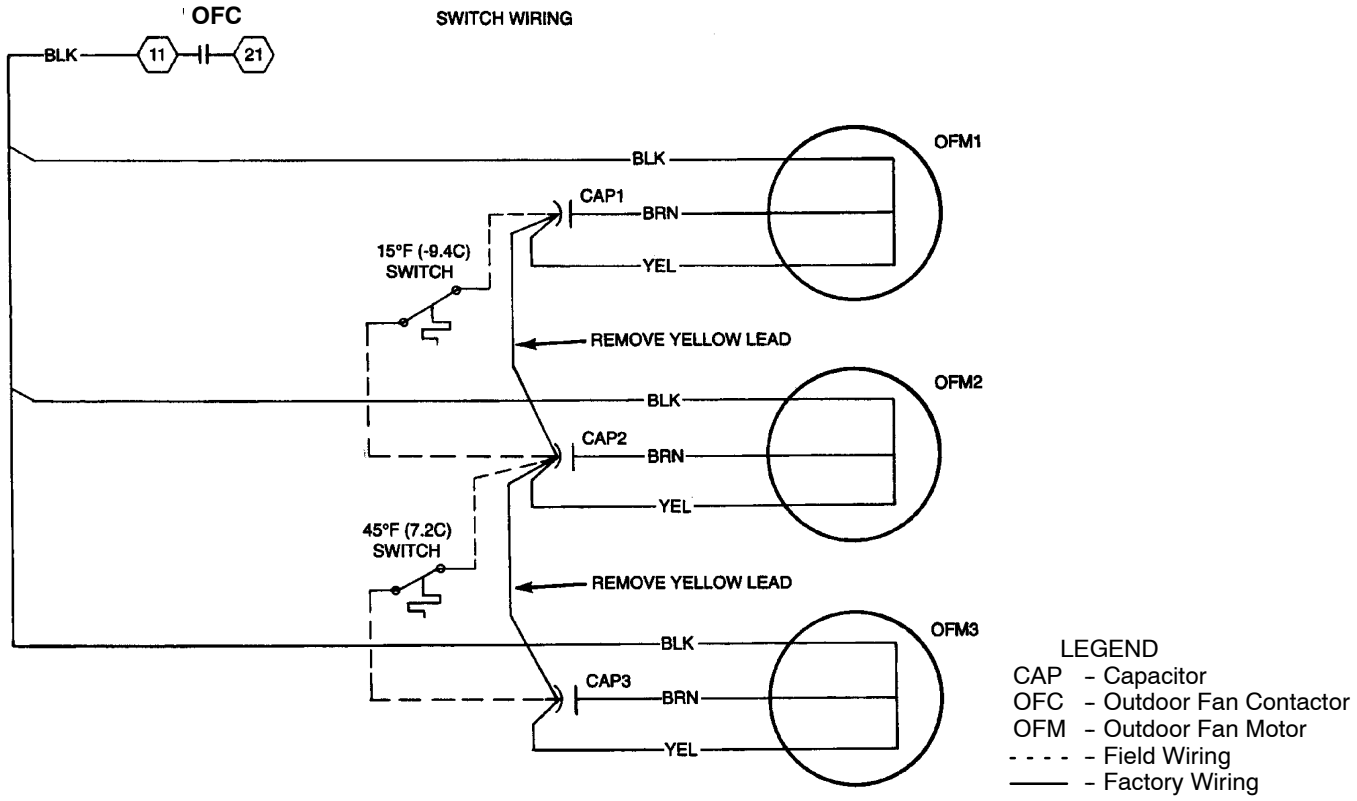
Figure 3 - Typical Wiring Diagram (Cooling Only and Heating/Cooling Unit Applications, 15 tons.)