# Installation, Start−Up and Service Instructions

## BHC & HBC Series Heat Pump Air Handlers
## BAC & ABC Series Air Conditioner Air Handlers

### 6 to 20 Ton

### IMPORTANT — READ BEFORE INSTALLING

1 . Read and become familiar with these installation instructions before installing this unit.

2. Be sure the installation conforms to all applicable local and national codes.

3. These instructions contain important information for the proper maintenance and repair of this equipment. Retain these instructions for future use.

### CONTENTS


| | Page |
|---|---|
| SAFETY CONSIDERATIONS | 1,2 |
| PRE−INSTALLATION | 2 |
| Rigging | 2 |
| Installation | 2-23 |
| General | 2 |
| Uncrating | 2 |
| Accessories | 2 |
| Model Nomenclature | 2 |
| Unit Positioning | 2 |
| Unit Isolation | 3 |
| Refrigerant Piping | 3 |
| Condensate Drain | 9 |
| Fan Motors and Drives | 9 |
| Power Supply and Wiring | 10 |
| Connecting Ductwork | 10 |
| Return−Air Filters | 10 |
| Start−Up | 12 |
| Service | 12 |
| Panels | 12 |
| Fan Motor Lubrication | 12 |
| Fan Shaft Bearings | 12 |
| Centering Fan Wheel | 12 |
| Fan Shaft Position Adjustment | 12 |
| Individual Fan Wheel Adjustment | 13 |
| Fan Belts | 13 |
| Fan Rotation | 13 |
| Fan Pulley Alignment | 14 |
| Pulley and Drive Adjustment | 14 |
| Condensate Drains | 14 |
| Coil Removal | 14 |
| Cleaning Cooling Coil | 14 |
| Replacing Filters | 23 |
| Cleaning Insulation | 24 |
| Start−Up Checklist | 25 |
| Parts | 27−32 |
| Warranty | 33 |


### SAFETY CONSIDERATIONS

**⚠ WARNING**

Improper installation, adjustment, alteration, service, maintenance, or use can cause explosion, fire, electric shock, or other occurrences which may injure you or damage your property. Consult qualified installer or service agency for information or assistance. The qualified installer or agency must use only factory-authorized kits or accessories when modifying this product.

Understand the signal words — DANGER, WARNING, and CAUTION. These words are used with the safety-alert symbol. Danger identifies the most serious hazards which will result in severe personal injury or death. Warning indicates a condition that could result in personal injury. Caution is used to identify unsafe practices which would result in minor personal injury or product and property damage.

Installing, starting up, and servicing this equipment can be hazardous due to system pressures, electrical components and equipment location (elevated structures, etc.).

Only trained, qualified installers and service mechanics should install, start up, and service this equipment.

Untrained personnel can perform basic maintenance functions such as cleaning coils, and cleaning and replacing filters. All other operations should be performed by trained service personnel.

When working on the equipment, observe precautions in the literature and on tags, stickers, and labels attached to the equipment.

1. Follow all safety codes.
2. Wear safety glasses and work gloves.
3. Use care in handling, rigging, and setting bulky equipment.

**⚠ WARNING**

Be sure all power to equipment is shut off before performing maintenance or service. More than one disconnect may be present.

1. The power supply (v, ph, and Hz) must correspond to that specified on unit rating plate.
2. The electrical supply provided by the utility must be sufficient to handle load imposed by this unit.
3. This installation must conform with local building codes and with the NEC (National Electrical Code) or ANSI (American National Standards Institute)/NFPA (National Fire Protection Association) latest revision. Refer to provincial and local plumbing or wastewater codes and other applicable local codes.


Printed in Mexico

508 01 1201 04 01/28/10

## MODEL NUMBER IDENTIFICATION GUIDE FOR MODEL NUMBERS THAT BEGIN WITH 'B'

| MODEL NUMBER | B | H | C | 090 | M | 1 | A |
|---|---|---|---|---|---|---|---|

**PRODUCT FAMILY**
Air Handler Units

**TYPE**
H= Heat Pump
A = Air Conditioner

**DESIGN SERIES**

**Engineering Digit**

**BLOWER DRIVE OPTIONS**
1 = Medium Static Drive
2 = High Static Drive

**VOLTAGE**
H = 208/240-3-60 . . M = 208/230/460-3-60
L = 460-3-60 . . . . . S = 575-3-60

**COOLING CAPACITY (NOMINAL BTUH)**
. . . . . 075 = 6 Ton . . . . . 090 = 7−1/2
. . . . . 120 = 10 Ton . . . . 150 = 12−1/2 Ton
. . . . . 180 = 15 Ton

## MODEL NUMBER IDENTIFICATION GUIDE FOR MODEL NUMBERS THAT BEGIN WITH 'A or H'

| MODEL NUMBER | H | B | C | 090 | M | 1 | A |
|---|---|---|---|---|---|---|---|

**TYPE**
H= Heat Pump
A = Air ConditionerPackaged

**PRODUCT FAMILY**
Air Handler Units

**DESIGN SERIES**

**Engineering Digit**

**BLOWER DRIVE OPTIONS**
1 = Medium Static Drive
2 = High Static Drive

**VOLTAGE**
H = 208/240-3-60 L = 460-3-60
S = 575-3-60 M = 208/230/460-3-60

**COOLING CAPACITY (NOMINAL BTUH)**
. . . . . 075 = 6 Ton . . . . . 090 = 7−1/2
. . . . . 120 = 10 Ton . . . . . 150 = 12−1/2 Ton
. . . . . 180 = 15 Ton . . . . . 240 = 20 Ton

## PRE-INSTALLATION

**Rigging** All units can be rigged by using the shipping skid. Units are shipped fully assembled. Do not remove shipping skids or protective covering until unit is ready for final placement; damage to bottom panels can result. Use slings and spreader bars as applicable to lift unit.

## INSTALLATION

**General** Allow $2^1/_2$ ft at front and side of unit for service clearance and airflow. For units equipped with an economizer, refer to the accessory installation instructions for additional clearance requirements. Be sure floor, wall, or ceiling can support unit weight.

**Uncrating** Move unit as near as possible to final location before removing shipping skid.

Remove metal banding, top skid, and plastic wrap. Examine unit for shipping damage. If shipping damage is evident, file claim with transportation agency. Remove base skid just prior to actual installation.

**NOTE:** Be sure to remove the styrofoam shipping pad from the thermostatic expansion valve (TXV). Verify that it has been removed. See Fig. 1.

**Accessories** Refer to instructions shipped with each accessory for specific information.

**Figure 1** Styrofoam Shipping Pad Removal

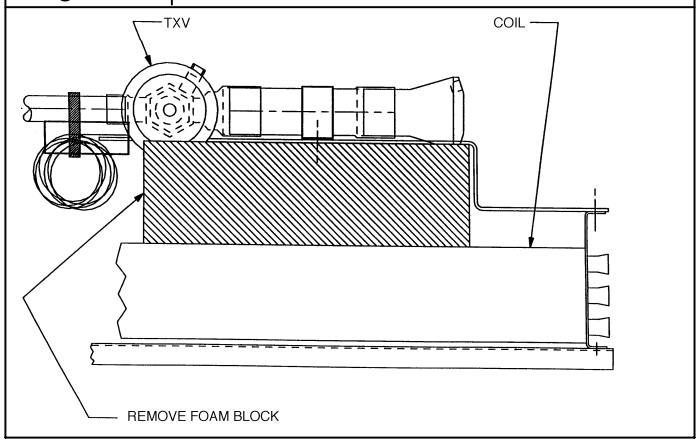


**Unit Positioning** The unit can be mounted on the floor for vertical application with return air entering the face of the unit and supply air discharging vertically through the top of the unit. The unit can also be applied in a horizontal arrangement with return air entering horizontally and the supply air discharging horizontally. When applying the unit in a horizontal arrangement, ensure the condensate drain pan is located at the bottom center of the unit for adequate condensate disposal. See Fig. 2 for condensate connections for each unit position.

Typical positioning and alternate return air locations are shown in Fig. 2. Alternate return air locations can be used by moving the unit panel from the alternate return air location to the standard return air location. Refer to overhead suspension accessory drawing (Fig. 3) for preferred suspension technique. The unit needs support underneath to prevent sagging.

IMPORTANT: Do NOT attempt to install unit with return air entering top panel of unit. Condensate will not drain from unit.

**Figure 2** **Typical Unit Positioning**

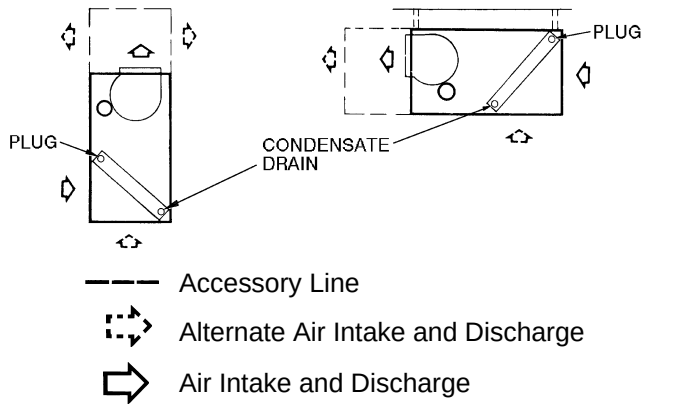


**Unit Isolation** Where extremely quiet operation is essential, install isolators between floor and base of unit, or between ceiling and top section of unit.

Be sure that unit is level and adequately supported. Use channels at front and sides of unit for reference points when leveling.

**Refrigerant Piping** For ease in brazing, it is recommended that all internal solder joints be made before unit is placed in final position.

The direct-expansion units have internal factory-installed thermostatic expansion valves (TXVs), distributors, and nozzles for use with R-22. Knockouts are provided in the unit corner posts for BAC/ABC and BHC/HBC090 and 120 refrigerant piping. The BHC/HBC0180 unit requires additional field-fabricated piping access holes. See Fig. 4, which also lists recommended knockouts and access holes to use for each BAC/ABC and BHC/HBC unit size. Recommended fittings are listed in Table 1.

The sensor bulb capillary tubes must be routed from the TXVs inside the unit through one of the piping access holes. Clamp the TXV sensor bulb on a vertical portion of the suction line, outside the unit. See Fig. 5.

**NOTE**: Be sure to remove the styrofoam shipping pad from the TXV. Verify that it has been removed. See Fig. 1.

IMPORTANT: Never attach the sensor to the suction manifold. Do NOT mount the sensor on a trapped portion of the suction line.

The BAC/ABC Series evaporator coils have a face-split design. Ensure that lower circuit of coil is first on/last off when connected to the condensing unit and/or system controls. See Fig. 6.

External TXV equalizer connections are provided and factory-brazed into the coil suction manifolds.

If suction line must be horizontal, clamp bulb to suction line at least 45 degrees above bottom, at approximately the 4 o'clock or 8 o'clock position. See Fig. 7.

NOTE: The BHC/HBC units are supplied with factory-installed thermostatic expansion valves and check valve bypasses. No extra piping connections or kits are required to install the BHC/HBC with a CHC/HCC condensing unit in a heat pump system, however, some field supplied components may be required. See the following two sections.

CHC/HCC090 with BHC/HBC090 HEAT PUMP SYSTEM PIPING Addition of a liquid solenoid valve (LLSV) is recommended when the piping system length exceeds 75 feet. The LLSV must be a bi-flow type suited for use in heat pump systems. The recommended valve is Sporlan model CB14S2 ($^5/_8$-in. ODF, $^7/_8$-in. ODM). This solenoid valve requires Sporlan part no. MKC-2 coils that must be purchased locally. Wire the solenoid valve in parallel with the compressor contactor coil.

The LLSV must be installed at the outdoor unit with the flow arrow pointed toward the outdoor unit (in-flow direction for the heating mode.)

**Fig. 3 Preferred Suspension Technique**

UNIT SIZES 6 to 10 Ton

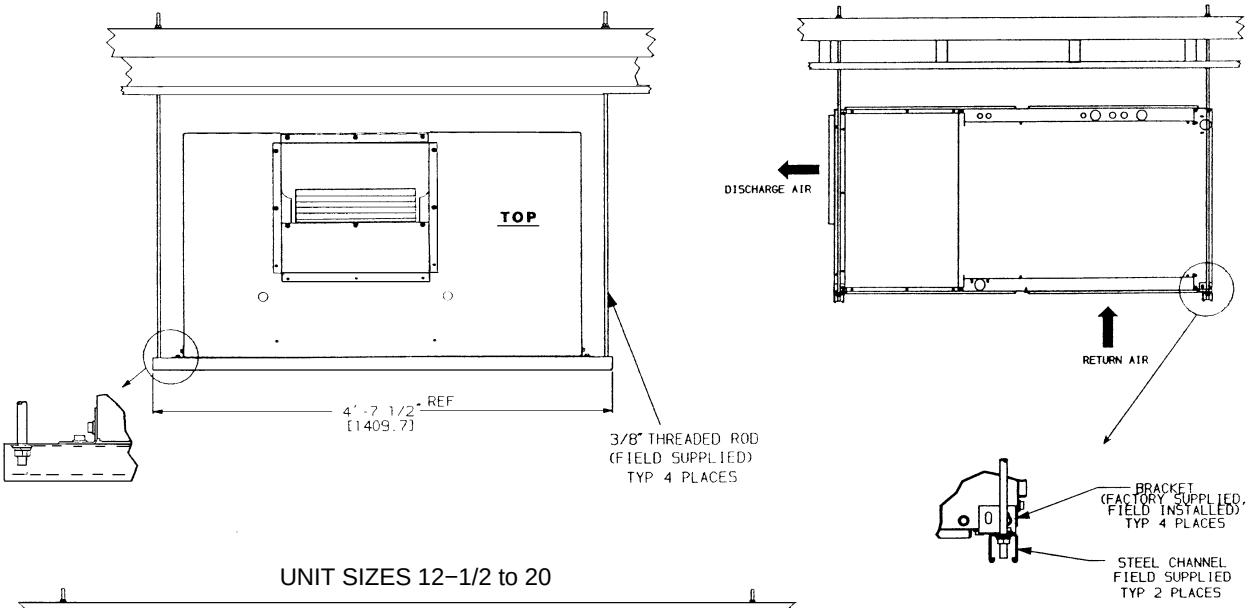


UNIT SIZES 12−1/2 to 20

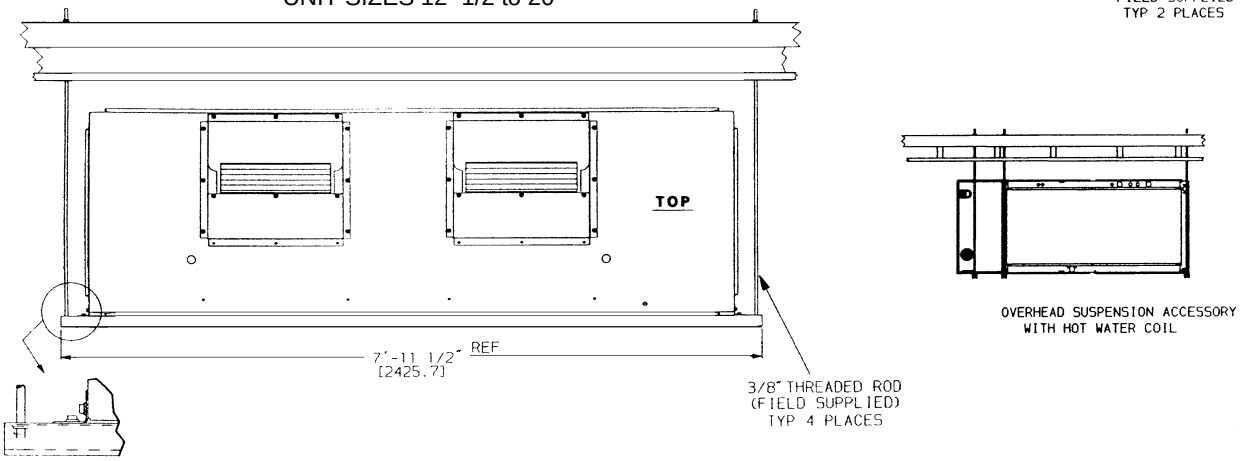


NOTE: Dimensions in [ ] are millimeters.

OVERHEAD SUSPENSION ACCESSORY

# Table 1: Fitting Requirements

| UNIT | ACCESS HOLE NO.* | CONNECTION TYPE | CIRCUIT | FITTINGS REQUIRED† (in.) |
|---|---|---|---|---|
| BAC/ABC075 | 1 | Suction | — | $1^1/_8$ Street Elbow |
| | | | | $1^1/_8$ Nipple, $10^5/_8$ L |
| | | | | $1^1/_8$ Long Radius Elbow |
| | 3 | Liquid | — | $^5/_8$ Street Elbow |
| | | | | $^5/_8$ Nipple, $8^5/_8$ L |
| | | | | $^5/_8$ Long Radius Elbow |
| BAC/ABC090 BHC/HBC090 | 1 | Suction | — | $1^1/_8$ Street Elbow |
| | | | | $1^1/_8$ Nipple, $8^5/_8$ L |
| | | | | $1^1/_8$ Long Radius Elbow |
| | 3 | Liquid | — | $^5/_8$ Street Elbow |
| | | | | $^5/_8$ Nipple, $8^5/_8$ L |
| | | | | $^5/_8$ Long Radius Elbow |
| BAC/ABC120 | 1 | Suction | Lower | (2) $1^1/_8$ Street Elbow |
| | 2 | Liquid | Lower | $^5/_8$ Street Elbow |
| | | | | $^5/_8$ Nipple, $8^1/_2$ L |
| | | | | $^5/_8$ Long Radius Elbow |
| | 3 | Liquid | Upper | $^5/_8$ Street Elbow |
| | | | | $^5/_8$ Nipple, $13^1/_2$ L |
| | | | | $^5/_8$ Long Radius Elbow |
| | 4 | Suction | Upper | $1^1/_8$ Nipple, $5^3/_4$ L |
| | | | | $1^1/_8$ Long Radius Elbow |
| | | | | $1^1/_8$ Nipple, 12 L |
| | | | | $1^1/_8$ Long Radius Elbow |
| BHC/HBC120 | 1 | Suction | Lower | (2) $1^1/_8$ Street Elbow |
| | 2 | Liquid | Lower | $^5/_8$ Street Elbow |
| | | | | $^5/_8$ Nipple, $5^1/_2$ L |
| | | | | $^5/_8$ Long Radius Elbow |
| | 3 | Liquid | Upper | $^5/_8$ Street Elbow |
| | | | | $^5/_8$ Nipple, $10^1/_2$ L |
| | | | | $^5/_8$ Long Radius Elbow |
| | 4 | Suction | Upper | $1^1/_8$ Nipple, $5^5/_8$ L |
| | | | | $1^1/_8$ Long Radius Elbow |
| | | | | $1^1/_8$ Nipple, 12 L |
| | | | | $1^1/_8$ Long Radius Elbow |
| BAC/ABC150 | 1 | Suction | Lower | $1^1/_8$ Street Elbow |
| | | | | $1^1/_8$ Nipple, $7^5/_8$ L |
| | | | | $1^1/_8$ Long Radius Elbow |
| | 2 | Liquid | Lower | $^5/_8$ Street Elbow |
| | | | | $^5/_8$ Nipple, $1^7/_{16}$ L |
| | | | | $^5/_8$ Long Radius Elbow |
| | 3 | Liquid | Upper | $^5/_8$ Street Elbow |
| | | | | $^5/_8$ Nipple, $11^1/_2$ L |
| | | | | $^5/_8$ Long Radius Elbow |
| | 4 | Suction | Upper | $1^1/_8$ Nipple, $5^5/_8$ L |
| | | | | $1^1/_8$ Long Radius Elbow |
| | | | | $1^1/_8$ Nipple, 13 L |
| | | | | $1^1/_8$ Long Radius Elbow |

**Table 1 — Fitting Requirements**

*See Fig. 4 for access hole location by number.
†Fittings are listed in order from header or tee stub connection out to access hole in corner support post.

## Table 1 — Fitting Requirements (cont)

| UNIT | ACCESS HOLE NO.* | CONNECTION TYPE | CIRCUIT | FITTINGS REQUIRED† (in.) |
|---|---|---|---|---|
| BAC/ABC180 | 1 | Suction | Lower | $1^1/_8$ Street Elbow |
| | | | | $1^1/_8$ Nipple, $2^3/_4$ L |
| | | | | $1^1/_8$ Long Radius Elbow |
| | 2 | Liquid | Lower | $^5/_8$ Street Elbow |
| | | | | $^5/_8$ Nipple, $1^3/_8$ L |
| | | | | $^5/_8$ Long Radius Elbow |
| | 3 | Liquid | Upper | $^5/_8$ Street Elbow |
| | | | | $^5/_8$ Nipple, $11^1/_2$ L |
| | | | | $^5/_8$ Long Radius Elbow |
| | 4 | Suction | Upper | $1^1/_8$ Nipple, $5^5/_8$ L |
| | | | | $1^1/_8$ Long Radius Elbow |
| | | | | $1^1/_8$ Nipple, 13 L |
| | | | | $1^1/_8$ Long Radius Elbow |
| BHC/HBC180 | 3 | Suction | Lower | $1^1/_8$ Nipple, 3 L |
| | | | | $1^1/_8$ Long Radius Elbow |
| | 5 | Liquid | Lower | $^5/_8$ Nipple, $2^7/_8$ L |
| | | | | $^5/_8$ 45° Elbow |
| | | | | $^5/_8$ Nipple, $1^5/_8$ L |
| | | | | $^5/_8$ Long Radius Elbow |
| | 6 | Liquid | Upper | $^5/_8$ Nipple, $2^7/_8$ L |
| | | | | $^5/_8$ 45° Elbow |
| | | | | $^5/_8$ Nipple, $4^1/_4$ L |
| | | | | $^5/_8$ Long Radius Elbow |
| | 7 | Suction | Upper | $1^1/_8$ Nipple, 5 L |
| | | | | $1^1/_8$ 45° Elbow |
| | | | | $1^1/_8$ Nipple, $8^3/_4$ L |
| | | | | $1^1/_8$ Long Radius Elbow |
| BAC/ABC240 BAC/ABC245 | 1 | Suction | Lower | $1^1/_8$ Street Elbow |
| | | | | $1^1/_8$ Nipple, $7^5/_8$ L |
| | | | | $1^1/_8$ Long Radius Elbow |
| | 2 | Liquid | Lower | $^5/_8$ Street Elbow |
| | | | | $^5/_8$ Nipple, $6^1/_2$ L |
| | | | | $^5/_8$ Long Radius Elbow |
| | 3 | Liquid | Upper | $^5/_8$ Street Elbow |
| | | | | $^5/_8$ Nipple, $9^1/_2$ L |
| | | | | $^5/_8$ Long Radius Elbow |
| | 4 | Suction | Upper | $1^1/_8$ Nipple, $5^5/_8$ L |
| | | | | $1^1/_8$ Long Radius Elbow |
| | | | | $1^1/_8$ Nipple, 11 L |
| | | | | $1^1/_8$ Long Radius Elbow |

**Table 1 — Fitting Requirements**

*See Fig. 4 for access hole location by number.
†Fittings are listed in order from header or tee stub connection out to access hole in corner support post.

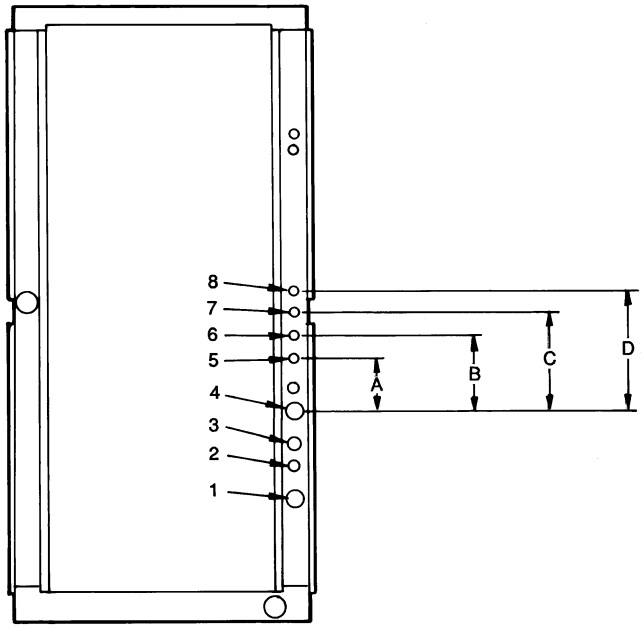


| UNIT | Use Hole Numbers | Field Fabricated Hole Diameters in. (mm) | | | | Field Fabricated Hole Position Dimensions, In.(mm) | | | |
|---|---|---|---|---|---|---|---|---|---|
| | | No. 5 | No. 6 | No. 7 | No. 8 | A | B | C | D |
| BAC/ABC075−090 BHC/HBC090 | 1, 3 | – | – | – | – | – | – | – | – |
| BAC/ABC120−245 BHC/HBC120 | 1, 2, 3, 4 | – | – | – | – | – | – | – | – |
| BHC/HBC180 | 3*, 5, 6, 7 | 1−1/8 (28.6 ) | 1−1/8 (28.6) | 1−3/4 (44.5) | – | 3.25 (82.6) | 6.125 (155.6) | 10.38 (263.7) | – |

*Must be enlarged from $1^1/_8$ in. to $1^3/_4$ inches.
NOTE: Access hole knockouts 1-4 are factory-supplied.

**Fig. 4 — Refrigerant Piping Access Holes**

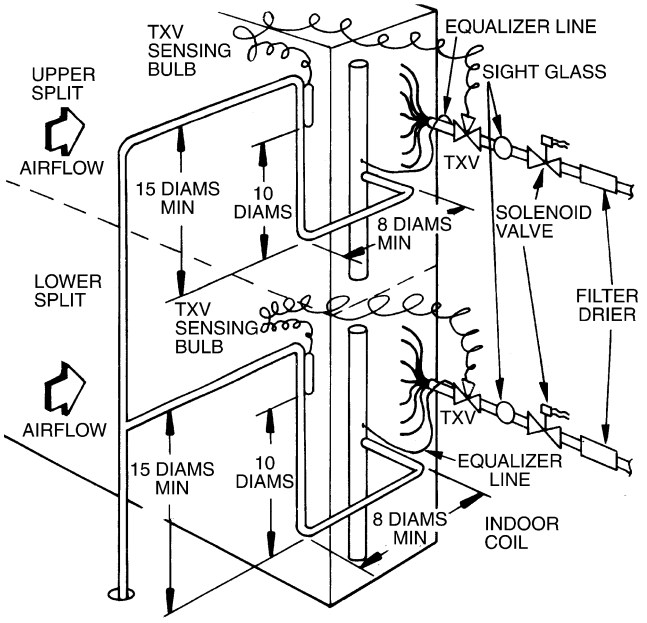


LEGEND
**TXV —** Thermostatic Expansion Valve

NOTE: Component location arrangement shown for field installation of sight glasses, solenoid valves, filter driers, and TXV sensing bulbs. The TXVs and equalizer lines are factory installed.

**Fig. 5 — Face-Split Coil Suction and Liquid Line Piping (Typical)**

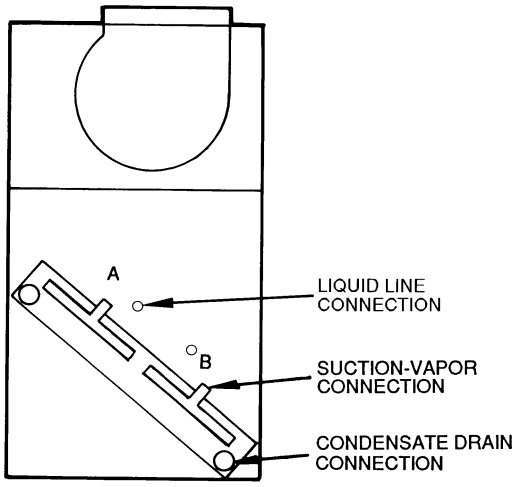


FIRST ON/LAST OFF = B
VERTICAL INSTALLATION

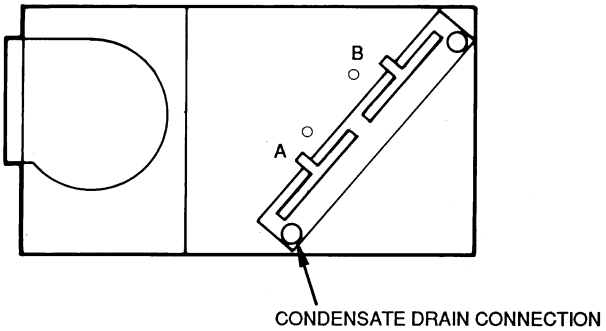


FIRST ON/LAST OFF = A
HORIZONTAL INSTALLATION

**Fig. 6 — Typical Evaporator Coil Connections (BAC/ABC, BHC/HBC)**

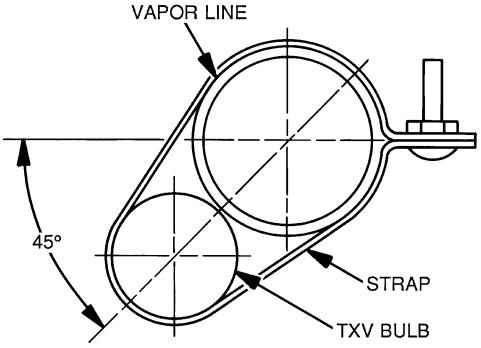


LEGEND
**TXV —** Thermostatic Expansion Valve
NOTE: The 8 o'clock position is shown above.

**Fig. 7 — TXV Sensing Bulb Location**

**Condensate Drain** Install a trapped condensate drain line to unit connection as shown in Fig. 9. The unit drain connection is a PVC stub. See Fig. 10. Some areas may require an adapter to connect to either galvanized steel or copper pipe. For these applications, install a field-supplied threaded PVC adapter.

**NOTE:** A trap must be installed in the condensate drain line to ensure that the static pressure of fans is balanced with the water column in the drain line and that condensate can drain completely from pan. Without a trap, air can be drawn up drain line until water level in condensate pan becomes equal to static pressure created by fans, preventing complete drainage. Conditions will worsen as filters become dirty.

Install clean-out plugs in trap. Pitch drain line downward to an open floor drain or sump. Provide service clearance around drain line to permit removal of unit panels. Observe all local sanitary codes.

**NOTE:** As shipped, the unit's condensate drain pan is NOT sloped towards the drain connection. The pan slope must be changed to pitch towards the side of the unit with the drain connection. See Fig. 10. Loosen the 2 screws next to the drain outlet at both ends of the unit, push drain pan down in the slots near the drain connection, and up in the slots on the opposite end. Retighten screws. The pan should have a pitch of at least $^1/_4$-in. over its length toward the drain connection.

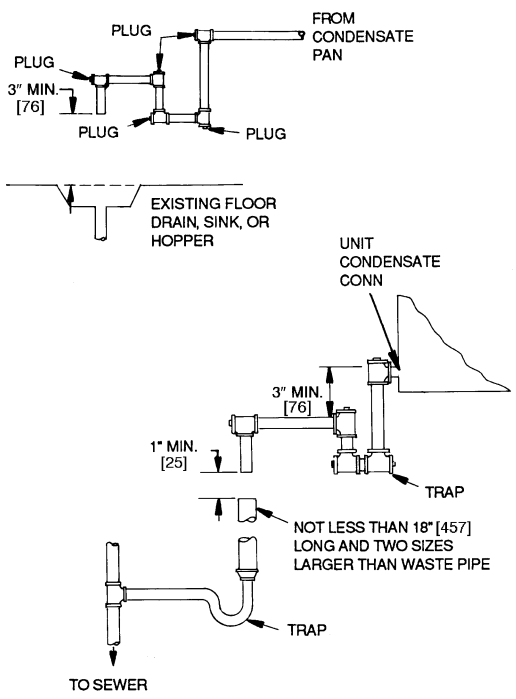


NOTE: Dimensions in [ ] are in millimeters.

**Fig. 9 — Drain Pan Slope Adjustment**

**Fan Motors and Drives** Motor and drive packages are factory installed in all units. The standard motor and drive packages consist of the following items:

1 — fan motor
1 — adjustable motor pulley
1 — fan pulley
1 — fan belt (BAC/ABC075−180, BHC/HBC090−180 units)
2 — matched fan belts (BAC/ABC240 units)

For instructions on changing fan rotation, changing drive speeds and adjusting drives, see Pulley and Drive Adjustment in the Service section.

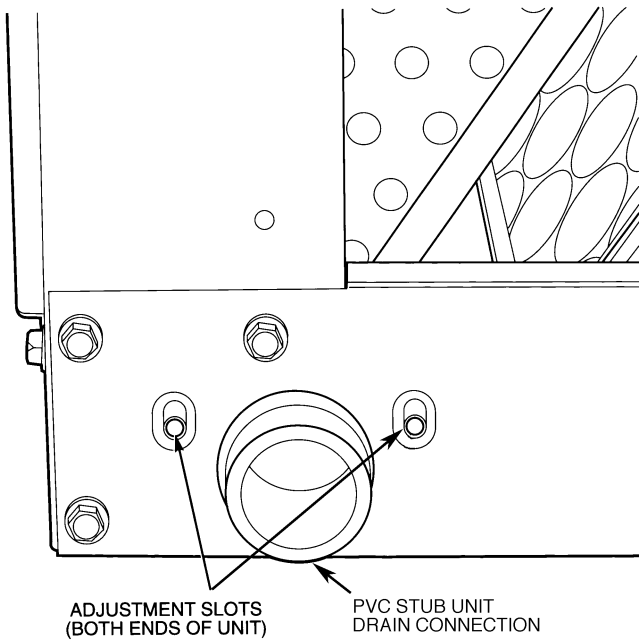


**Fig. 10 — Condensate Drains**

**Power Supply and Wiring** Check the unit data plate to ensure that available power supply matches electrical characteristics of the unit. Provide a disconnect switch of size required to provide adequate fan motor starting current.

Install disconnect switch and power wiring in accordance with all applicable local codes. See Fig. 11-13 and the unit label diagram. For units with motor sizes less than 5 Hp (3.7 kW), connect power wiring to unit with no. 10 ring terminal. For units with motor sizes of 5 Hp (3.7 kW) or more, connect power wiring with $^1/_4$-in. ring terminal.

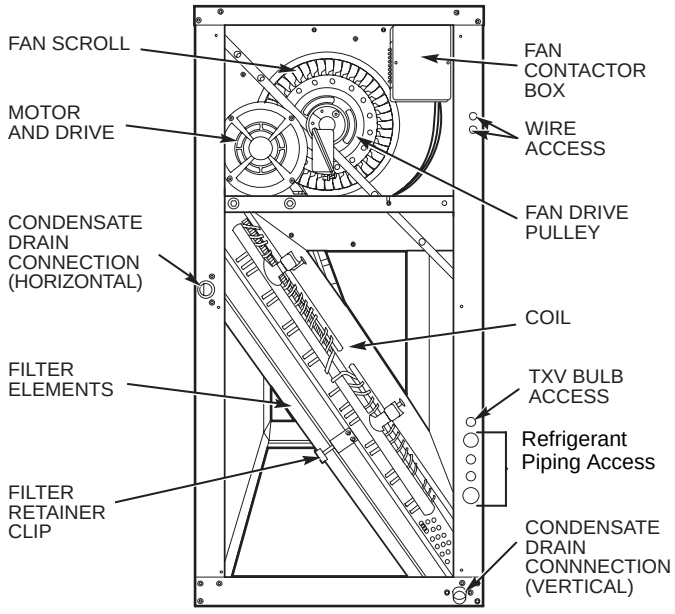


LEGEND
**TXV —** Thermostatic Expansion Valve

**Fig. 11 — Wiring and Service Access (Side Panel Removed)**

The BAC/ABC and BHC/HBC size 6 to 15 ton units (except BAC/ABC180 with high static drive option) that have motors wired for 460-v, 3-ph, 60 Hz operation can be field-converted to 208/230-v, 3-ph, 60 Hz operation. Rewire the motor according to the diagram plate on the motor. After reconfiguring the motor, mark the motor specifying 208-v or 230-v operation replacing the 460-v sticker information on the units' corner post.

Fan motors are factory installed on all units. Indoor-fan contactors are located in the fan contactor box behind the side access panel (see Fig. 11 and 12). Wire the thermostat to the 24-v control circuit terminal block located in the side of the fan contactor control box, according to Fig. 13 or the unit label diagram. If the air handler is part of a split system, complete the wiring from the condensing unit to the thermostat shown in Fig. 14.

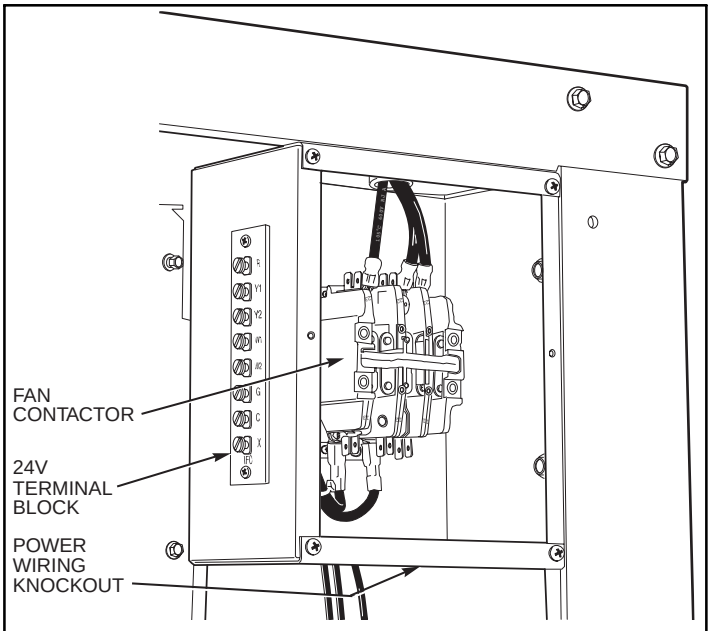


**Fig. 12 — Fan Contactor Box and Terminal Block Cover Removed (Typical)**

**Table 2 — Fan Contactor Coil Data**

| UNIT BAC/ABC, BHC/HBC | VOLTAGE (vac) | MAXIMUM HOLDING VA |
|---|---|---|
| **6 to 20 Ton** | 24 | 10 |

## Connecting Ductwork

**DISCHARGE CONNECTIONS** Duct flanges are factory supplied; they are shipped inside the unit attached to the hairpin end of the coil tube sheet for field installation. Using the existing screws, install the duct flanges on the unit's fan deck. Each fan discharge requires 2 flanges; each flange must be bent in the middle to conform to the discharge opening. See Fig. 14. After flanges are installed, connect them to the supply duct using a canvas connection to prevent vibration. It is important that this connection be properly fabricated to prevent high air friction losses and air noise.

**RETURN CONNECTION** When using return-air ductwork, route return-air duct to the unit's return air inlet near the filter rack, using a canvas connection to prevent transmission of unit vibration. If the duct blocks off the unit's access panel, provide a slip joint in the ductwork to permit removal for servicing.

**OUTDOOR-AIR INLET CONNECTION** Connect outdoor-air inlet to field-installed accessory economizer. Refer to economizer Installation Instructions.

**Return-Air Filters** Air filters are factory-supplied and installed. In all units with 2 fans, a filter replacement tool (hook) is shipped inside the unit for field use when replacing filters. See the Service section for instructions on filter element replacement.

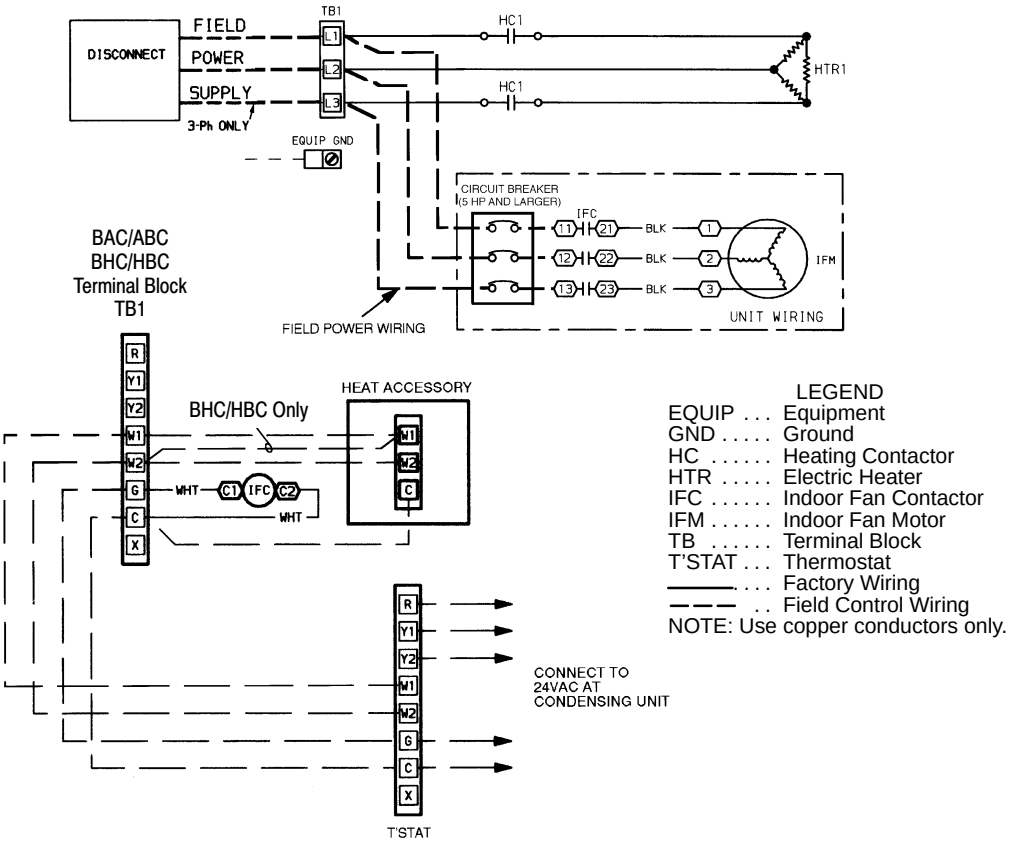


**Fig. 13 — Unit Wiring**

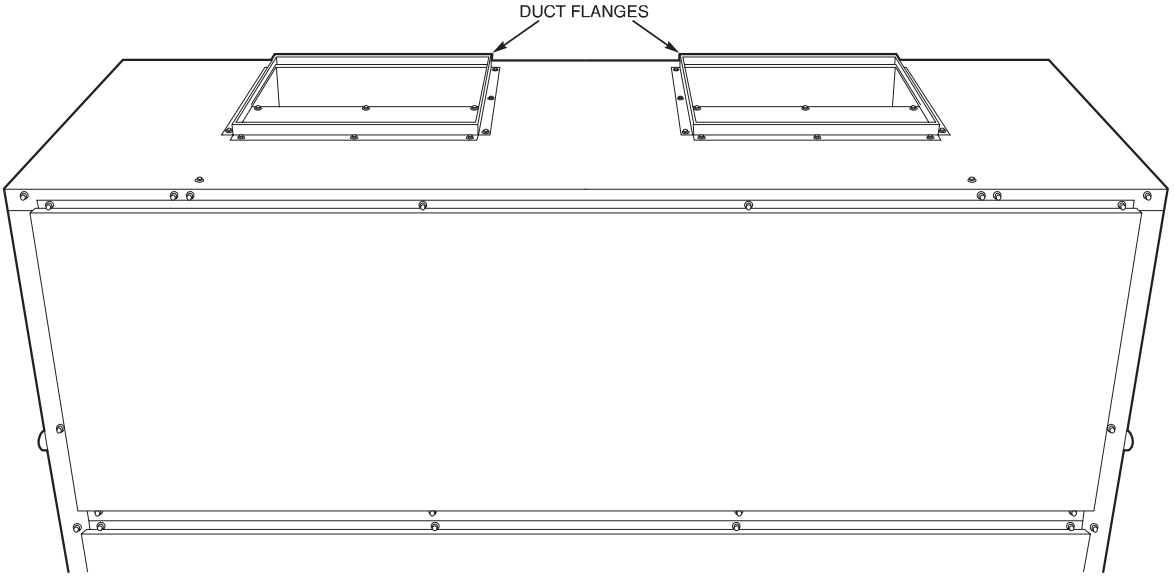


**Fig. 14 — Duct Flange Connection**

## START-UP

Before starting unit, check the following and correct as necessary:

- Is unit solidly supported?
- Is fan adjusted for speed and pulley alignment?
- Are pulleys, motor, and bearings securely mounted?
- Are there any loose parts that will rattle or vibrate?
- Is condensate drain pan pitched for correct drainage?
- Are coil baffle plates tight against coil to prevent air bypass?
- Are all panels securely fastened?
- Are all electrical connections correct and tight?

Also refer to condensing unit instructions before starting a split system. A split system start-up checklist is provided in the back of these instructions.

## SERVICE

Inspection and maintenance should be performed at regular intervals and should include the following:

- Complete cleaning of cabinet, fan wheel, cooling coil, condensate pan and drain, heating coils, and return-air grille (if present).
- Inspection of panels and sealing of unit against air leakage.
- Adjustment of fan motor, belt, bearings, and wheels.
- Cleaning or replacement of filters.
- Testing for cooling/heating system leaks.
- Checking of all electrical connections.

Most unit service can be performed by removing one or both of the unit's side panels. Coil cleaning or removal or insulation cleaning may require removal of a rear, top, or bottom panel, depending on the unit's orientation. When service is completed, replace unit panels.

**Panels** Panels are fastened to unit frame with sheet metal screws. Fan and coil compartment must be sealed tightly after service to prevent air from bypassing the cooling coil.

**Fan Motor Lubrication** Fan motor supplied with unit is permanently lubricated and requires no further lubrication.

**Fan Shaft Bearings** Bearings on 6 to 10 ton units are sealed, permanently lubricated bearings that require no further lubrication. 12 to 20 ton units have pillow-block bearings (Fig. 15) that must be lubricated with suitable bearing grease approximately every 3 months. See Table 3 for suitable lubricants.

**Table 3 — Lubricant Data**

| MANUFACTURER | LUBRICANT |
|---|---|
| Mobil | Mobilplex EP No. 2 |
| Sunoco | Prestige 42 |
| Texaco | Multifak 2 |
| Texaco | Regal AFB-2* |

*Preferred lubricant because it contains rust and oxidation inhibitors.

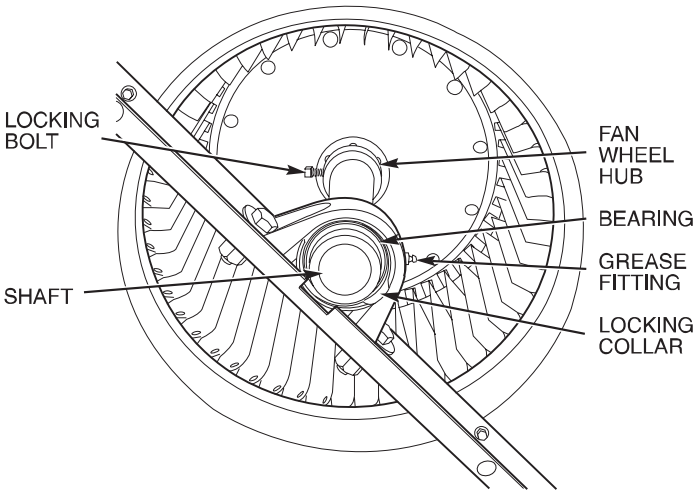


**Fig. 15 — Fan Shaft, Bearings, and Fan Wheel (Typical)**

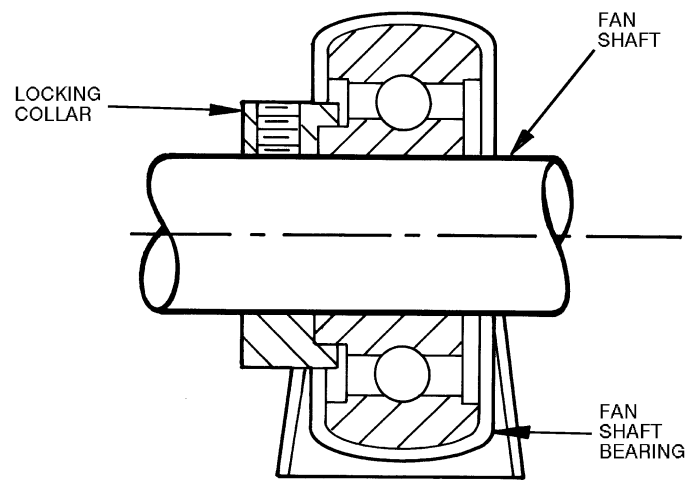


**Fig. 16 — Fan Shaft Bearing**

**Centering Fan Wheel** If fan and fan shaft assembly are not properly centered, blades may scrape against scroll or may create an objectionable whistling noise. It may be necessary to adjust individual fan wheels or move entire fan shaft. See the following two sections.

**Fan Shaft Position Adjustment** Loosen setscrew or locking collar of each fan shaft bearing. Slide shaft into correct position and replace locking collar (Fig. 16). To replace locking collar, push collar up against inner face of bearing. Turn collar in direction of fan rotation until tight, and tighten setscrew. Tightening locking collar in direction of fan rotation results in further tightening of collar should setscrew work itself loose.

**Individual Fan Wheel Adjustment** Loosen the 2 locking bolts holding fan wheel hub to shaft. See Fig. 15. Position fan wheel in center of the fan housing and tighten locking bolts. Clearance between wheel and housing should be the same on both sides.

**Fan Belts** Motor mounting plate and motor support angles are slotted to permit both vertical and horizontal adjustment. Adjust belt(s) for correct deflection by loosening motor plate mounting bolts, moving motor/plate assembly forward or back, and retightening bolts. Press down on belt with one finger midway between fan and motor pulleys to check deflection. For units with motor sizes up to and including 3.7 Hp (2.76 kW), correct deflection is $^{3}/_{16}$-in. (4.8 mm) For larger motor sizes, correct deflection is $^{1}/_{8}$-in. (3.2 mm). See Fig. 17.

If complete belt replacement is required during servicing, loosen the motor plate mounting bolts (Fig. 18), move motor/plate assembly towards fan pulley, and pull belt(s) off pulleys. Reverse the procedure with new bolts and readjust deflection.

**Fan Rotation** Correct fan rotation with respect to fan outlet is shown in Fig. 18.

To reverse the direction of rotation of a 3-phase fan motor, reverse any 2 of the power leads. Refer to the connection diagram on the inside of motor terminal box cover for proper reversing procedure of single-phase motor.

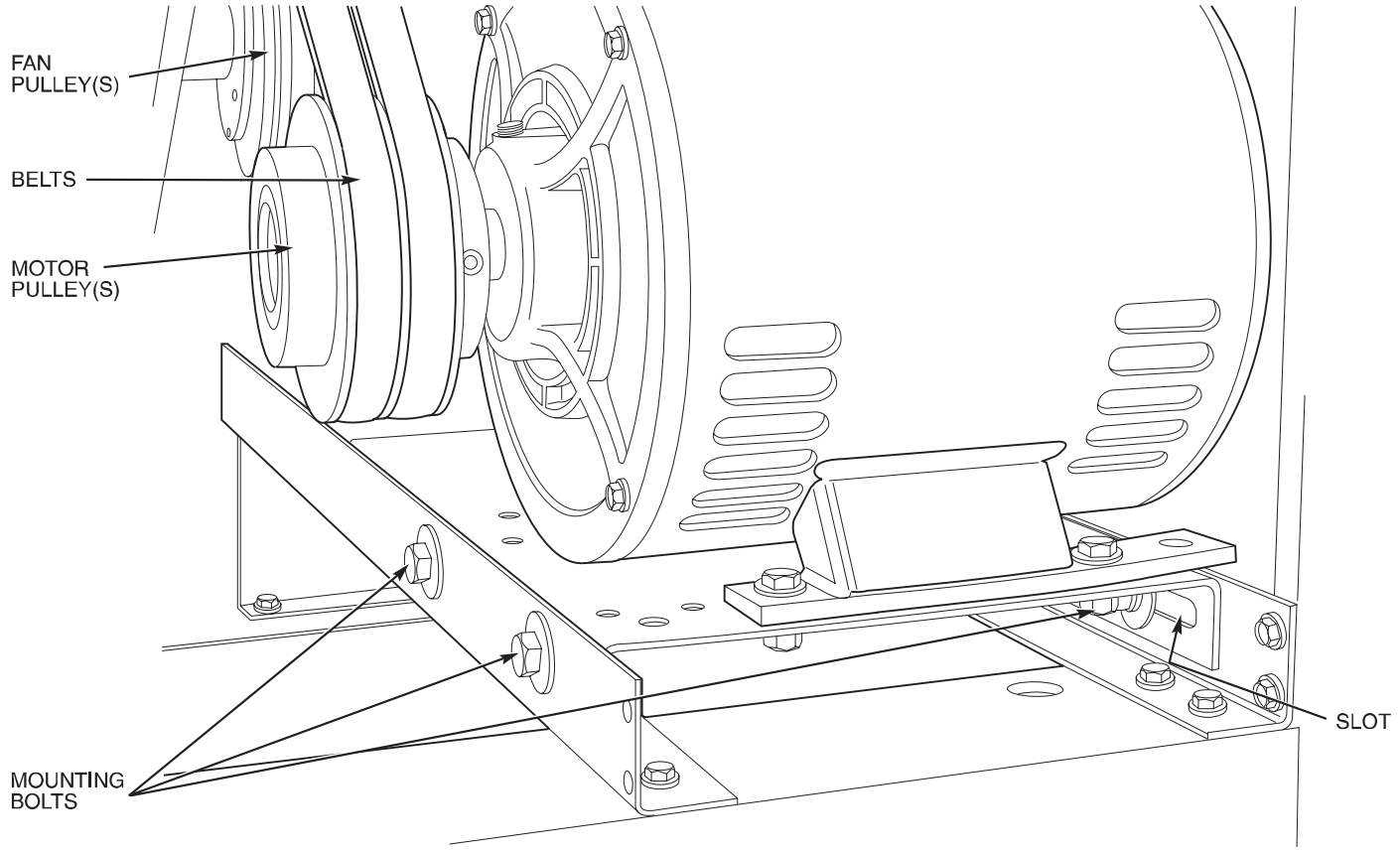


**Fig. 17 — Fan Motor Mounting**

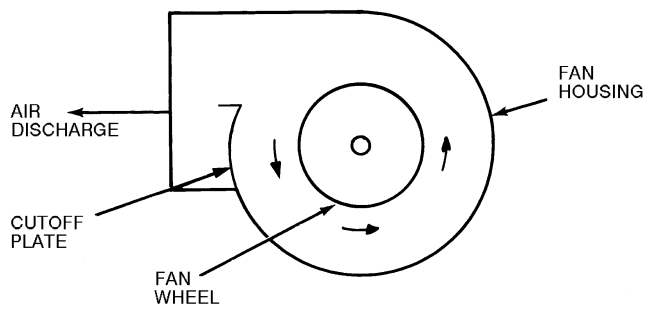


**Fig. 18 — Fan Rotation**

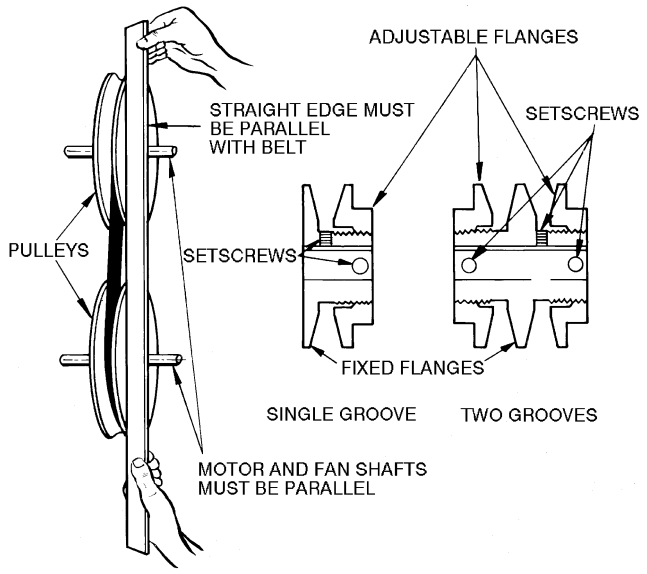


**Fig. 19 — Fan Pulley Adjustments**

**Fan Pulley Alignment** Align as follows:

1. Loosen setscrews on pulleys.
2. Align pulleys visually and tighten setscrews on fan pulley to lock it in place.
3. Use the methods shown in Fig. 19 to check proper pulley alignment.
4. If pulleys are not in correct alignment, loosen the motor holddown bolts and slide the motor axially until the pulleys are aligned.
5. Tighten motor holddown bolts.

**Pulley and Drive Adjustment** To obtain desired fan speed, refer to the fan motor and drive data in Tables 8A-10D and adjust fan motor pulley as follows:

1. Remove belt from fan motor pulley after loosening motor from motor base.
2. Loosen setscrew in moveable flange of pulley. Screw moveable flange toward fixed flange to increase the fan speed and away from fixed flange to reduce speed. Before tightening setscrew, make certain that setscrew is over nearest flat surface of pulley hub (Fig. 19).

**⚠ CAUTION**

Increasing fan speed produces a greater load on motor. Do not exceed rated capacity of motor.

**Condensate Drains** Keep condensate drains free of dirt and foreign matter.

**Return-Air Filters** Refer to Replacing Filters section for filter accessibility and removal. Replace with clean filters.

**Coil Removal** Remove unit panels and corner posts as required. Disconnect coil connections and remove fastening screws. Remove coil through end or side sections of unit.

**Cleaning Cooling Coil** Remove return-air filters. Remove any heavy dirt that may have accumulated on underside of coil. Coil can be cleaned more easily with a stiff brush, vacuum cleaner, or compressed air when coil is dry. If coil is wet or if water is to be used for cleaning, guard against splashing water on electrical components or damaging surrounding area. Clean coil baffles as applicable and check for tight fit to be sure air does not bypass coil.

**Cleaning Insulation** The insulation contains an immobilized antimicrobial agent that helps prevent the growth of bacteria and fungi. Clean the inner surface of the insulation according to the maintenance instructions in this manual.

## Table 4A — Fan Motor Data, Standard Motor — English

| UNIT | BAC/ABC 075 | BAC/ABC BHC/HBC 090 | BAC/ABC BHC/HBC 12O | BAC/ABC 150 | BAC/ABC BHC/HBC 180 | BAC/ABC 240/245 |
|---|---|---|---|---|---|---|
| 208/230-3-60 and 460-3-60 | | | | | | |
| Speed (rpm) | 1725 | 1725 | 1725 | 1725 | 1725 | 1745 |
| Hp | 2.4 | 2.4 | 2.4 | 2.9 | 3.7 | 5.0 |
| Frame (NEMA) | 56Y | 56Y | 56Y | 56Y | 56Y | S184T |
| Shaft Dia (in.) | $^5/_8$ | $^5/_8$ | $^5/_8$ | $^7/_8$ | $^7/_8$ | $1^1/_8$ |
| 575-3-60 | | | | | | |
| Speed (rpm) | 1725 | 1725 | 1725 | 1725 | 1725 | 1745 |
| Hp | 1.0 | 2.0 | 2.0 | 3.0 | 3.0 | 5.0 |
| Frame (NEMA) | 56 | 56HZ | 56HZ | 56HZ | 56HZ | 184T |
| Shaft Dia (in.) | $^5/_8$ | $^7/_8$ | $^7/_8$ | $^7/_8$ | $^7/_8$ | $1^1/_8$ |

LEGEND

**NEMA —** National Electrical Manufacturers Association

## Table 4B — Medium-Static Drive Data, 60 Hz — English

| UNIT | BAC/ABC 075 | BAC/ABC BHC/HBC 090 | BAC/ABC BHC/HBC 120 | BAC/ABC 150 | BAC/ABC BHC/HBC 180 | BAC/ABC 240/245 |
|---|---|---|---|---|---|---|
| MOTOR DRIVE | | | | | | |
| Motor Pulley Pitch Diameter (in.) | 3.4-4.4 | 3.4-4.4 | 3.4-4.4 | 3.4-4.4 | 3.7-4.7 | 4.3-5.3 |
| Pulley Factory Setting Full Turns Open | 2.5 | 2.5 | 2.5 | 2.5 | 3.0 | 3.0 |
| FAN DRIVE | | | | | | |
| Pulley Pitch Dia (in.) | 8.8 | 8.0 | 8.0 | 8.2 | 8.6 | 9.4 |
| Pulley Bore (in.) | 1 | 1 | 1 | $1^7/_{16}$ | $1^7/_{16}$ | $1^7/_{16}$ |
| Belt No. — Section | 1—A | 1—A | 1—A | 1—A | 1—B | 2—B |
| Belt Pitch (in.) | 42.3 | 40.3 | 40.3 | 41.3 | 41.8 | 41.8 |
| FAN SPEEDS (rpm) | | | | | | |
| Factory Setting | 764 | 841 | 841 | 820 | 842 | 881 |
| Range | 666-863 | 733-949 | 733-949 | 715-926 | 742-943 | 798-984 |
| Max Allowable Speed (rpm) | 1200 | 1200 | 1200 | 1200 | 1200 | 1200 |
| Change per $^1/_2$ Turn of Moveable Motor Pulley Flange | 19.7 | 21.6 | 21.6 | 21.1 | 16.7 | 15.3 |
| MAX FULL TURNS FROM CLOSED POSITION | 5 | 5 | 5 | 5 | 6 | 6 |
| SHAFTS CENTER DISTANCE (in.) | 10.44-12.32 | 10.44-12.32 | 10.44-12.32 | 10.44-12.32 | 10.44-12.32 | 9.16-10.99 |

## Table 4C — Fan Motor Data, Standard Motor — SI

| UNIT | BAC/ABC 075 | BAC/ABC BHC/HBC 090 | BAC/ABC BHC/HBC 120 | BAC/ABC 150 | BAC/ABC BHC/HBC 180 | BAC/ABC 240/245 |
|---|---|---|---|---|---|---|
| 208/230-3-60 and 460-3-60 | | | | | | |
| Speed (r/s) | 28.75 | 28.75 | 28.75 | 28.75 | 28.75 | 29.08 |
| Shaft kW | 1.79 | 1.79 | 1.79 | 2.16 | 2.76 | 3.73 |
| Frame (NEMA) | 56Y | 56Y | 56Y | 56Y | 56Y | S184T |
| Shaft Dia (mm) | 15.9 | 15.9 | 15.9 | 22.2 | 22.2 | 28.6 |
| 575-3-60 | | | | | | |
| Speed (r/s) | 28.75 | 28.75 | 28.75 | 28.75 | 28.75 | 29.08 |
| Shaft kW | 0.746 | 1.49 | 1.49 | 2.24 | 2.24 | 3.73 |
| Frame (NEMA) | 56 | 56HZ | 56HZ | 56HZ | 56HZ | 184T |
| Shaft Dia (mm) | 15.9 | 22.2 | 22.2 | 22.2 | 22.2 | 28.6 |

LEGEND

**NEMA —** National Electrical Manufacturers Association

## Table 4D — Medium-Static Drive Data, 60 Hz — SI

| UNIT | BAC/ABC 075 | BAC/ABC BHC/HBC 090 | BAC/ABC BHC/HBC 120 | BAC/ABC 150 | BAC/ABC BHC/HBC 180 | BAC/ABC 240/245 |
|---|---|---|---|---|---|---|
| MOTOR DRIVE | | | | | | |
| Motor Pulley Pitch Diameter (mm) | 86.4-111.8 | 86.4-111.8 | 86.4-111.8 | 86.4-111.8 | 94.0-119.4 | 109.2-134.6 |
| Pulley Factory Setting Full Turns Open | 2.5 | 2.5 | 2.5 | 2.5 | 3.0 | 3.0 |
| FAN DRIVE | | | | | | |
| Pulley Pitch Dia (mm) | 224 | 203 | 203 | 208 | 218 | 239 |
| Pulley Bore (mm) | 25.4 | 25.4 | 25.4 | 36.5 | 36.5 | 36.5 |
| Belt No. — Section | 1—A | 1—A | 1—A | 1—A | 1—B | 2—B |
| Belt Pitch (mm) | 1074 | 1240 | 1240 | 1049 | 1062 | 1062 |
| FAN SPEEDS (r/s) | | | | | | |
| Factory Setting | 12.7 | 14.0 | 14.0 | 13.7 | 14.0 | 14.7 |
| Range | 11.1-14.4 | 12.2-15.8 | 12.2-15.8 | 11.9-15.4 | 12.4-15.7 | 13.3-16.4 |
| Max Allowable Speed (r/s) | 20.0 | 20.0 | 20.0 | 20.0 | 20.0 | 20.0 |
| Change per $^1/_2$ Turn of Moveable Motor Pulley Flange | 0.328 | 0.360 | 0.360 | 0.352 | 0.278 | 0.255 |
| MAX FULL TURNS FROM CLOSED POSITION | 5 | 5 | 5 | 5 | 6 | 6 |
| SHAFTS CENTER DISTANCE (mm) | 265-313 | 265-313 | 265-313 | 265-313 | 265-313 | 232-279 |

## Table 4E — Fan Motor Data, Alternate Motor — English

| UNIT | BAC/ABC 075 | BAC/ABC BHC/HBC 090 | BAC/ABC BHC/HBC 120 | BAC/ABC 150 | BAC/ABC BHC/HBC 180 | BAC/ABC 240/245 |
|---|---|---|---|---|---|---|
| 208/230-3-60 and 460-3-60 | | | | | | |
| Speed (rpm) | 1725 | 1725 | 1725 | 1725 | 1725 | 1745 |
| Hp | 2.9 | 2.9 | 3.7 | 3.7 | 5.0 | 7.5 |
| Frame (NEMA) | 56Y | 56Y | Y56Y | Y56Y | S184T | S213T |
| Shaft Dia (in.) | $^{7}/_{8}$ | $^{7}/_{8}$ | $^{7}/_{8}$ | $^{7}/_{8}$ | $1^{1}/_{8}$ | $1^{3}/_{8}$ |
| 575-3-60 | | | | | | |
| Speed (rpm) | 1725 | 1725 | 1725 | 1745 | 1745 | 1755 |
| Hp | 2.0 | 3.0 | 3.0 | 5.0 | 5.0 | 7.5 |
| Frame (NEMA) | 56HZ | 56HZ | 56HZ | 184T | 184T | S213T |
| Shaft Dia (in.) | $^{7}/_{8}$ | $^{7}/_{8}$ | $^{7}/_{8}$ | $1^{1}/_{8}$ | $1^{1}/_{8}$ | $1^{3}/_{8}$ |

LEGEND

**NEMA —** National Electrical Manufacturers Association

## Table 4F — High-Static Drive Data, 60 Hz — English

| UNIT | BAC/ABC 075 | BAC/ABC BHC/HBC 090 | BAC/ABC BHC/HBC 120 | BAC/ABC 150 | BAC/ABC BHC/HBC 180 | BAC/ABC 240/245 |
|---|---|---|---|---|---|---|
| MOTOR DRIVE | | | | | | |
| Motor Pulley Pitch Diameter (in.) | 3.4-4.4 | 3.4-4.4 | 3.4-4.4 | 3.7-4.7 | 4.3-5.3 | 4.3-5.3 |
| Pulley Factory Setting Full Turns Open | 2.5 | 2.5 | 2.5 | 3.0 | 3.0 | 3.0 |
| FAN DRIVE | | | | | | |
| Pulley Pitch Dia (in.) | 7.0 | 6.0 | 6.0 | 7.4 | 7.9 | 7.4 |
| Pulley Bore (in.) | 1 | 1 | 1 | $1^{7}/_{16}$ | $1^{7}/_{16}$ | $1^{7}/_{16}$ |
| Belt No. — Section | 1—A | 1—A | 1—A | 1—B | 1—B | 2—B |
| Belt Pitch (in.) | 41.3 | 37.3 | 37.3 | 39.8 | 39.8 | 36.8 |
| FAN SPEEDS (rpm) | | | | | | |
| Factory Setting | 961 | 1121 | 1121 | 979 | 1060 | 1118 |
| Range | 838-1084 | 978-1200*† | 978-1200† | 873-1096 | 950-1171 | 1150-1200† |
| Max Allowable Speed (rpm) | 1200 | 1200 | 1200 | 1200 | 1200 | 1200 |
| Change per $^{1}/_{2}$ Turn of Moveable Motor Pulley Flange | 24.6 | 28.7 | 28.7 | 19.4 | 18.4 | 19.4 |
| MAX FULL TURNS FROM CLOSED POSITION | 5 | 5 | 5 | 6 | 6 | 6 |
| SHAFTS CENTER DISTANCE (in.) | 10.44-12.32 | 10.44-12.32 | 10.44-12.32 | 10.44-12.32** | 9.16-10.99 | 8.16-10.02 |

†It is possible to adjust drive so that fan speed exceeds maximum allowable. DO NOT exceed 1200 rpm.
**575-v unit has a center distance of 9.16-10.99.

## Table 4G — Fan Motor Data, Alternate Motor — SI

| UNIT | BAC/ABC 075 | BAC/ABC BHC/HBC 090 | BAC/ABC BHC/HBC 120 | BAC/ABC 150 | BAC/ABC BHC/HBC 180 | BAC/ABC 240/245 |
|---|---|---|---|---|---|---|
| 208/230-3-60 and 460-3-60 | | | | | | |
| Speed (r/s) | 28.75 | 28.75 | 28.75 | 28.75 | 29.08 | 29.08 |
| Shaft kW | 2.16 | 2.16 | 2.76 | 2.76 | 3.73 | 5.60 |
| Frame (NEMA) | 56Y | 56Y | Y56Y | Y56Y | S184T | S213T |
| Shaft Dia (mm) | 22.2 | 22.2 | 22.2 | 22.2 | 28.6 | 34.9 |
| 575-3-60 | | | | | | |
| Speed (r/s) | 28.75 | 28.75 | 28.75 | 29.08 | 29.08 | 29.25 |
| Shaft kW | 1.49 | 2.24 | 2.24 | 3.73 | 3.73 | 5.60 |
| Frame (NEMA) | 56HZ | 56HZ | 56HZ | 184T | 184T | S213T |
| Shaft Dia (mm) | 22.2 | 22.2 | 22.2 | 28.6 | 28.6 | 34.9 |

LEGEND

**NEMA —** National Electrical Manufacturers Association

## Table 4H — High-Static Drive Data, 60 Hz — SI

| UNIT | BAC/ABC 075 | BAC/ABC BHC/HBC 090 | BAC/ABC BHC/HBC 120 | BAC/ABC 150 | BAC/ABC BHC/HBC 180 | BAC/ABC 240/245 |
|---|---|---|---|---|---|---|
| MOTOR DRIVE | | | | | | |
| Motor Pulley Pitch Diameter (mm) | 86.4-111.8 | 86.4-111.8 | 86.4-111.8 | 94.0-119.4 | 109.2-134.6 | 109.2-134.6 |
| Pulley Factory Setting Full Turns Open | 2.5 | 2.5 | 2.5 | 3.0 | 3.0 | 3.0 |
| FAN DRIVE | | | | | | |
| Pulley Pitch Dia (mm) | 178 | 152 | 152 | 188 | 201 | 188 |
| Pulley Bore (mm) | 25.4 | 25.4 | 25.4 | 36.5 | 36.5 | 36.5 |
| Belt No. — Section | 1—A | 1—A | 1—A | 1—B | 1—B | 2—B |
| Belt Pitch (mm) | 1049 | 947 | 947 | 1011 | 1011 | 935 |
| FAN SPEEDS (r/s) | | | | | | |
| Factory Setting | 16.0 | 18.7 | 18.7 | 16.3 | 17.7 | 18.6 |
| Range | 14.0-18.1 | 16.3-20.0*† | 16.3-20.0† | 14.4-18.3 | 15.8-19.5 | 16.9-20.0† |
| Max Allowable Speed (r/s) | 20.0 | 20.0 | 20.0 | 20.0 | 20.0 | 20.0 |
| Change per $^1/_2$ Turn of Moveable Motor Pulley Flange | 0.410 | 0.478 | 0.478 | 0.323 | 0.307 | 0.323 |
| MAX FULL TURNS FROM CLOSED POSITION | 5 | 5 | 5 | 6 | 6 | 6 |
| SHAFTS CENTER DISTANCE (mm) | 265-313 | 265-313 | 265-313 | 265-313** | 232-279 | 207-255 |

†It is possible to adjust drive so that fan speed exceeds maximum allowable. DO NOT exceed 20 r/s.
**575-v unit has a center distance of 233-279.

## Table 5A — Fan Performance Data — 0.0-1.2 in. wg ESP — English

| UNIT | AIRFLOW (Cfm) | EXTERNAL STATIC PRESSURE (in. wg) | | | | | | | | | | | | | |
|---|---|---|---|---|---|---|---|---|---|---|---|---|---|---|---|
| | | 0.0 | | 0.2 | | 0.4 | | 0.6 | | 0.8 | | 1.0 | | 1.2 | |
| | | Rpm | Bhp | Rpm | Bhp | Rpm | Bhp | Rpm | Bhp | Rpm | Bhp | Rpm | Bhp | Rpm | Bhp |
| BAC/ABC 075 | 1,800 | 320 | 0.22 | 442 | 0.32 | 534 | 0.42 | 611 | 0.52 | 678 | 0.61 | 739 | 0.70 | 795 | 0.80 |
| | 2,100 | 373 | 0.31 | 483 | 0.42 | 569 | 0.53 | 642 | 0.63 | 708 | 0.73 | 767 | 0.82 | 821 | 0.92 |
| | 2,400 | 427 | 0.42 | 526 | 0.53 | 606 | 0.64 | 676 | 0.75 | 739 | 0.86 | 796 | 0.96 | 849 | 1.06 |
| | 2,700 | 480 | 0.54 | 570 | 0.67 | 646 | 0.78 | 712 | 0.89 | 773 | 1.00 | 828 | 1.11 | 880 | 1.21 |
| | 3,000 | 533 | 0.69 | 616 | 0.82 | 687 | 0.94 | 750 | 1.05 | 808 | 1.16 | 862 | 1.28 | 912 | 1.39 |
| BAC/ABC BHC/HBC 090 | 2,250 | 359 | 0.32 | 472 | 0.44 | 560 | 0.55 | 634 | 0.65 | 700 | 0.75 | 759 | 0.86 | 814 | 0.96 |
| | 2,600 | 415 | 0.45 | 516 | 0.57 | 599 | 0.68 | 669 | 0.79 | 732 | 0.90 | 790 | 1.01 | 843 | 1.11 |
| | 3,000 | 478 | 0.62 | 569 | 0.75 | 645 | 0.86 | 712 | 0.98 | 773 | 1.09 | 828 | 1.20 | 879 | 1.32 |
| | 3,400 | 542 | 0.82 | 624 | 0.95 | 695 | 1.08 | 758 | 1.20 | 815 | 1.31 | 869 | 1.43 | 918 | 1.55 |
| | 3,750 | 598 | 1.03 | 673 | 1.17 | 740 | 1.29 | 800 | 1.42 | 855 | 1.60 | 906 | 1.66 | 954 | 1.78 |
| BAC/ABC 120 | 3,000 | 444 | 0.58 | 541 | 0.71 | 621 | 0.83 | 691 | 0.94 | 753 | 1.05 | 809 | 1.17 | 862 | 1.28 |
| | 3,500 | 518 | 0.82 | 604 | 0.95 | 677 | 1.08 | 742 | 1.20 | 801 | 1.32 | 855 | 1.44 | 906 | 1.56 |
| | 4,000 | 592 | 1.11 | 669 | 1.25 | 736 | 1.38 | 797 | 1.51 | 853 | 1.63 | 904 | 1.75 | 953 | 1.88 |
| | 4,500 | 666 | 1.44 | 735 | 1.59 | 797 | 1.72 | 854 | 1.86 | 907 | 1.99 | 956 | 2.12 | 1003 | 2.24 |
| | 5,000 | 740 | 1.83 | 803 | 1.98 | 861 | 2.12 | 914 | 2.26 | 964 | 2.39 | 1010 | 2.53 | 1055 | 2.66 |
| BHC/HBC 120 | 3,000 | 471 | 0.61 | 564 | 0.74 | 642 | 0.86 | 710 | 0.97 | 771 | 1.09 | 827 | 1.20 | 878 | 1.31 |
| | 3,500 | 550 | 0.87 | 632 | 1.00 | 703 | 1.13 | 766 | 1.25 | 824 | 1.37 | 877 | 1.49 | 926 | 1.60 |
| | 4,000 | 628 | 1.17 | 701 | 1.31 | 766 | 1.44 | 825 | 1.57 | 879 | 1.69 | 930 | 1.82 | 978 | 1.94 |
| | 4,500 | 706 | 1.53 | 772 | 1.67 | 832 | 1.81 | 887 | 1.94 | 938 | 2.07 | 987 | 2.20 | 1032 | 2.33 |
| | 5,000 | 785 | 1.93 | 845 | 2.08 | 900 | 2.22 | 952 | 2.36 | 1000 | 2.50 | 1045 | 2.63 | 1089 | 2.76 |
| BAC/ABC 150 | 3,750 | 363 | 0.37 | 475 | 0.58 | 566 | 0.80 | 645 | 1.02 | 715 | 1.24 | 779 | 1.47 | 839 | 1.69 |
| | 4,300 | 416 | 0.53 | 517 | 0.78 | 601 | 1.02 | 676 | 1.26 | 743 | 1.50 | 805 | 1.74 | 862 | 1.99 |
| | 5,000 | 484 | 0.81 | 573 | 1.08 | 650 | 1.35 | 719 | 1.62 | 782 | 1.89 | 841 | 2.16 | 896 | 2.44 |
| | 5,700 | 552 | 1.17 | 631 | 1.47 | 702 | 1.76 | 766 | 2.06 | 826 | 2.36 | 881 | 2.66 | 934 | 2.96 |
| | 6,250 | 605 | 1.51 | 678 | 1.83 | 744 | 2.15 | 805 | 2.47 | 862 | 2.79 | 915 | 3.11 | 966 | 3.43 |
| BAC/ABC 180 | 4,500 | 391 | 0.51 | 495 | 0.75 | 581 | 1.00 | 657 | 1.25 | 725 | 1.50 | 787 | 1.76 | 845 | 2.02 |
| | 5,300 | 460 | 0.80 | 551 | 1.08 | 629 | 1.35 | 700 | 1.63 | 764 | 1.91 | 823 | 2.20 | 878 | 2.48 |
| | 6,000 | 521 | 1.13 | 602 | 1.43 | 675 | 1.73 | 741 | 2.04 | 801 | 2.34 | 858 | 2.65 | 911 | 2.96 |
| | 6,800 | 590 | 1.60 | 663 | 1.93 | 730 | 2.26 | 791 | 2.59 | 847 | 2.92 | 901 | 3.26 | 951 | 3.60 |
| | 7,500 | 651 | 2.10 | 718 | 2.45 | 779 | 2.81 | 837 | 3.16 | 890 | 3.52 | 941 | 3.88 | 990 | 4.24 |
| BHC/HBC 180 | 4,500 | 405 | 0.54 | 507 | 0.79 | 592 | 1.03 | 667 | 1.28 | 735 | 1.54 | 797 | 1.80 | 854 | 2.06 |
| | 5,300 | 476 | 0.85 | 566 | 1.13 | 643 | 1.40 | 713 | 1.68 | 776 | 1.97 | 835 | 2.26 | 890 | 2.55 |
| | 6,000 | 539 | 1.20 | 620 | 1.50 | 691 | 1.81 | 756 | 2.11 | 816 | 2.42 | 872 | 2.73 | 924 | 3.05 |
| | 6,800 | 611 | 1.69 | 683 | 2.03 | 748 | 2.36 | 809 | 2.69 | 865 | 3.03 | 918 | 3.37 | 968 | 3.71 |
| | 7,500 | 674 | 2.22 | 740 | 2.58 | 800 | 2.93 | 857 | 3.29 | 910 | 3.65 | 960 | 4.02 | 1090 | 4.38 |
| BAC/ABC 240/245 | 6,000 | 503 | 1.07 | 587 | 1.37 | 661 | 1.67 | 727 | 1.97 | 789 | 2.28 | 846 | 2.59 | 900 | 2.90 |
| | 7,000 | 586 | 1.64 | 660 | 1.98 | 726 | 2.31 | 787 | 2.65 | 844 | 2.99 | 898 | 3.33 | 948 | 3.67 |
| | 8,000 | 670 | 2.37 | 735 | 2.74 | 795 | 3.12 | 851 | 3.49 | 904 | 3.86 | 954 | 4.23 | 1001 | 4.61 |
| | 9,000 | 754 | 3.28 | 812 | 3.69 | 867 | 4.09 | 918 | 4.50 | 967 | 4.90 | 1150 | 5.31 | 1059 | 5.72 |
| | 10,000 | 838 | 4.39 | 891 | 4.83 | 941 | 5.27 | 988 | 5.70 | 1034 | 6.14 | 1077 | 6.85 | 1120 | 7.02 |

See Legend and Notes on page 20.

## Table 5B — Fan Performance Data — 1.4-2.4 in. wg ESP — English

| UNIT | AIRFLOW (Cfm) | EXTERNAL STATIC PRESSURE (in. wg) | | | | | | | | | | | |
|---|---|---|---|---|---|---|---|---|---|---|---|---|---|
| | | 1.4 | | 1.6 | | 1.8 | | 2.0 | | 2.2 | | 2.4 | |
| | | Rpm | Bhp | Rpm | Bhp | Rpm | Bhp | Rpm | Bhp | Rpm | Bhp | Rpm | Bhp |
| BAC/ABC 075 | 1,800 | 847 | 0.89 | 896 | 0.98 | 942 | 1.07 | 986 | 1.16 | 1027 | 1.25 | — | — |
| | 2,100 | 872 | 1.02 | 920 | 1.11 | 965 | 1.21 | 1090 | 1.30 | 1050 | 1.40 | — | — |
| | 2,400 | 899 | 1.16 | 946 | 1.26 | 990 | 1.36 | 1033 | 1.46 | 1073 | 1.55 | — | — |
| | 2,700 | 928 | 1.32 | 974 | 1.42 | 1018 | 1.52 | 1059 | 1.63 | 1099 | 1.73 | — | — |
| | 3,000 | 959 | 1.49 | 1004 | 1.60 | 1046 | 1.71 | 1087 | 1.81 | 1126 | 1.92 | — | — |
| BAC/ABC BHC/HBC 090 | 2,250 | 865 | 1.06 | 913 | 1.16 | 958 | 1.27 | 1001 | 1.37 | 1042 | 1.47 | — | — |
| | 2,600 | 893 | 1.22 | 940 | 1.33 | 984 | 1.43 | 1027 | 1.54 | 1067 | 1.65 | — | — |
| | 3,000 | 928 | 1.43 | 973 | 1.54 | 1017 | 1.65 | 1058 | 1.76 | 1098 | 1.87 | — | — |
| | 3,400 | 965 | 1.66 | 1010 | 1.78 | 1052 | 1.89 | 1092 | 2.00 | 1131 | 2.12 | — | — |
| | 3,750 | 1000 | 1.90 | 1043 | 2.02 | 1084 | 2.13 | 1124 | 2.25 | 1162 | 2.37 | — | — |
| BAC/ABC 120 | 3,000 | 911 | 1.39 | 958 | 1.50 | 1002 | 1.61 | 1044 | 1.72 | 1084 | 1.83 | 1123 | 1.94 |
| | 3,500 | 953 | 1.67 | 998 | 1.79 | 1041 | 1.90 | 1082 | 2.02 | 1122 | 2.13 | 1159 | 2.25 |
| | 4,000 | 999 | 2.00 | 1042 | 2.12 | 1084 | 2.24 | 1124 | 2.36 | 1162 | 2.48 | 1199 | 2.60 |
| | 4,500 | 1047 | 2.37 | 1089 | 2.50 | 1129 | 2.62 | 1168 | 2.74 | — | — | — | — |
| | 5,000 | 1097 | 2.79 | 1138 | 2.92 | 1177 | 3.05 | — | — | — | — | — | — |
| BHC/HBC 120 | 3,000 | 927 | 1.43 | 973 | 1.54 | 1017 | 1.65 | 1058 | 1.76 | 1098 | 1.87 | 1137 | 1.98 |
| | 3,500 | 973 | 1.72 | 1018 | 1.84 | 1060 | 1.95 | 1101 | 2.07 | 1139 | 2.18 | 1177 | 2.30 |
| | 4,000 | 1023 | 2.06 | 1066 | 2.19 | 1107 | 2.31 | 1146 | 2.43 | 1184 | 2.55 | — | — |
| | 4,500 | 1075 | 2.45 | 1116 | 2.58 | 1156 | 2.71 | 1194 | 2.83 | — | — | — | — |
| | 5,000 | 1130 | 2.90 | 1170 | 3.03 | — | — | — | — | — | — | — | — |
| BAC/ABC 150 | 3,750 | 894 | 1.91 | 947 | 2.14 | 996 | 2.37 | 1044 | 2.60 | 1089 | 2.83 | — | — |
| | 4,300 | 916 | 2.23 | 967 | 2.48 | 1180 | 2.73 | 1062 | 2.98 | 1107 | 3.24 | — | — |
| | 5,000 | 948 | 2.71 | 997 | 2.98 | 1044 | 3.26 | 1089 | 3.53 | 1133 | 3.81 | — | — |
| | 5,700 | 984 | 3.25 | 1031 | 3.55 | 1076 | 3.86 | 1120 | 4.16 | 1162 | 4.46 | — | — |
| | 6,250 | 1150 | 3.75 | 1060 | 4.07 | 1104 | 4.39 | 1147 | 4.71 | 1188 | 5.03 | — | — |
| BAC/ABC 180 | 4,500 | 899 | 2.29 | 951 | 2.56 | 999 | 2.84 | 1046 | 3.12 | 1091 | 3.41 | 1133 | 3.70 |
| | 5,300 | 930 | 2.78 | 980 | 3.08 | 1027 | 3.38 | 1072 | 3.68 | 1116 | 3.99 | 1157 | 4.30 |
| | 6,000 | 961 | 3.28 | 1009 | 3.60 | 1055 | 3.92 | 1098 | 4.24 | 1141 | 4.57 | 1181 | 4.91 |
| | 6,800 | 999 | 3.94 | 1045 | 4.28 | 1089 | 4.63 | 1132 | 4.98 | 1173 | 5.33 | — | — |
| | 7,500 | 1036 | 4.60 | 1080 | 4.97 | 1123 | 5.34 | 1164 | 5.71 | — | — | — | — |
| BHC/HBC 180 | 4,500 | 908 | 2.33 | 959 | 2.61 | 1090 | 2.89 | 1054 | 3.17 | 1098 | 3.46 | 1141 | 3.75 |
| | 5,300 | 941 | 2.84 | 991 | 3.14 | 1038 | 3.45 | 1082 | 3.75 | 1126 | 4.06 | 1167 | 4.38 |
| | 6,000 | 974 | 3.36 | 1022 | 3.69 | 1067 | 4.01 | 1111 | 4.34 | 1153 | 4.67 | 1193 | 5.00 |
| | 6,800 | 1015 | 4.05 | 1061 | 4.40 | 1104 | 4.75 | 1146 | 5.10 | 1187 | 5.46 | — | — |
| | 7,500 | 1054 | 4.75 | 1098 | 5.12 | 1140 | 5.49 | 1181 | 5.86 | — | — | — | — |
| BAC/ABC 240/245 | 6,000 | 950 | 3.21 | 999 | 3.53 | 1045 | 3.85 | 1089 | 4.17 | 1131 | 4.50 | 1172 | 4.83 |
| | 7,000 | 996 | 4.02 | 1042 | 4.37 | 1086 | 4.72 | 1129 | 5.07 | 1169 | 5.43 | — | — |
| | 8,000 | 1047 | 4.99 | 1091 | 5.37 | 1133 | 5.75 | 1173 | 6.13 | — | — | — | — |
| | 9,000 | 1102 | 6.13 | 1143 | 6.54 | 1183 | 6.96 | — | — | — | — | — | — |
| | 10,000 | 1160 | 7.46 | 1200 | 7.91 | — | — | — | — | — | — | — | — |

### Legend and Notes for Tables 10A and 10B

LEGEND

Bhp — Brake Horsepower Input to Fan

ESP — External Static Pressure

NOTES:

1. Maximum allowable fan speed is 1100 rpm for unit sizes 028 and 034; 1200 rpm for all other sizes.
2. Fan performance is based on deductions for wet coil, clean 2-in. filters, and unit casing. See table at right for factory-supplied filter pressure drop.
3. Refer to fan motor and drive tables for additional data.

## Table 5C — Fan Performance Data — 0-300 Pa ESP — SI

| UNIT | AIRFLOW (L/s) | EXTERNAL STATIC PRESSURE (Pa) | | | | | | | | | | | | | |
|---|---|---|---|---|---|---|---|---|---|---|---|---|---|---|---|
| | | 0 | | 50 | | 100 | | 150 | | 200 | | 250 | | 300 | |
| | | r/s | kW | r/s | kW | r/s | kW | r/s | kW | r/s | kW | r/s | kW | r/s | kW |
| BAC/ABC 075 | 850 | 5.34 | 0.17 | 7.38 | 0.25 | 8.91 | 0.32 | 10.20 | 0.39 | 11.30 | 0.46 | 12.30 | 0.53 | 13.30 | 0.60 |
| | 1000 | 6.28 | 0.24 | 8.10 | 0.32 | 9.53 | 0.40 | 10.80 | 0.48 | 11.80 | 0.55 | 12.80 | 0.63 | 13.70 | 0.70 |
| | 1150 | 7.22 | 0.33 | 8.86 | 0.41 | 10.20 | 0.50 | 11.40 | 0.58 | 12.40 | 0.66 | 13.40 | 0.73 | 14.20 | 0.81 |
| | 1300 | 8.17 | 0.43 | 9.64 | 0.52 | 10.90 | 0.61 | 12.00 | 0.69 | 13.00 | 0.77 | 13.90 | 0.85 | 14.80 | 0.93 |
| | 1450 | 9.11 | 0.55 | 10.50 | 0.64 | 11.60 | 0.73 | 12.70 | 0.82 | 13.60 | 0.91 | 14.50 | 0.99 | 15.40 | 1.07 |
| BAC/ABC BHC/HBC 090 | 1000 | 5.63 | 0.22 | 7.61 | 0.30 | 9.11 | 0.38 | 10.40 | 0.45 | 11.50 | 0.53 | 12.50 | 0.61 | 13.40 | 0.68 |
| | 1200 | 6.76 | 0.32 | 8.49 | 0.41 | 9.88 | 0.50 | 11.10 | 0.57 | 12.10 | 0.66 | 13.10 | 0.74 | 14.00 | 0.82 |
| | 1400 | 7.89 | 0.46 | 9.42 | 0.55 | 10.70 | 0.64 | 11.80 | 0.72 | 12.80 | 0.81 | 13.80 | 0.89 | 14.60 | 0.97 |
| | 1600 | 9.01 | 0.62 | 10.40 | 0.71 | 11.60 | 0.80 | 12.60 | 0.89 | 13.60 | 0.98 | 14.50 | 1.07 | 15.30 | 1.16 |
| | 1800 | 10.10 | 0.80 | 11.40 | 0.90 | 12.50 | 0.10 | 13.50 | 1.09 | 14.40 | 1.18 | 15.20 | 1.27 | 16.00 | 1.36 |
| BAC/ABC 120 | 1450 | 7.58 | 0.46 | 9.18 | 0.56 | 10.50 | 0.65 | 11.60 | 0.73 | 12.70 | 0.82 | 13.60 | 0.90 | 14.50 | 0.99 |
| | 1670 | 8.73 | 0.63 | 10.20 | 0.73 | 11.40 | 0.83 | 12.50 | 0.92 | 13.40 | 1.01 | 14.30 | 1.10 | 15.20 | 1.18 |
| | 1900 | 9.93 | 0.84 | 11.20 | 0.95 | 12.30 | 1.05 | 13.30 | 1.14 | 14.30 | 1.24 | 15.10 | 1.33 | 15.90 | 1.42 |
| | 2120 | 11.10 | 1.08 | 12.20 | 1.18 | 13.30 | 1.29 | 14.20 | 1.39 | 15.10 | 1.48 | 15.90 | 1.58 | 16.70 | 1.68 |
| | 2350 | 12.30 | 1.36 | 13.30 | 1.17 | 14.30 | 1.57 | 15.20 | 1.68 | 16.00 | 1.78 | 16.80 | 1.88 | 17.60 | 1.98 |
| BHC/HBC 120 | 1450 | 8.04 | 0.49 | 9.57 | 0.58 | 10.90 | 0.67 | 12.00 | 0.76 | 13.00 | 0.85 | 13.90 | 0.93 | 14.80 | 1.02 |
| | 1670 | 9.26 | 0.67 | 10.60 | 0.77 | 11.80 | 0.86 | 12.90 | 0.95 | 13.80 | 1.04 | 14.70 | 1.13 | 15.50 | 1.22 |
| | 1900 | 10.50 | 0.89 | 11.80 | 0.99 | 12.80 | 1.09 | 13.80 | 1.19 | 14.70 | 1.28 | 15.60 | 1.38 | 16.40 | 1.47 |
| | 2120 | 11.80 | 1.14 | 12.90 | 1.24 | 13.90 | 1.35 | 14.80 | 1.45 | 15.60 | 1.55 | 16.40 | 1.64 | 17.20 | 1.74 |
| | 2350 | 13.00 | 1.43 | 14.00 | 1.54 | 15.00 | 1.65 | 15.80 | 1.75 | 16.60 | 1.85 | 17.40 | 1.95 | 18.10 | 2.05 |
| BAC/ABC 150 | 1750 | 5.99 | 0.27 | 7.88 | 0.43 | 9.41 | 0.59 | 10.70 | 0.75 | 11.90 | 0.92 | 13.00 | 1.08 | 14.00 | 1.25 |
| | 2050 | 7.01 | 0.41 | 8.68 | 0.60 | 10.10 | 0.78 | 11.30 | 0.96 | 12.40 | 1.14 | 13.50 | 1.33 | 14.40 | 1.51 |
| | 2350 | 8.04 | 0.60 | 9.53 | 0.81 | 10.80 | 1.01 | 12.00 | 1.21 | 13.00 | 1.41 | 14.00 | 1.61 | 14.90 | 1.82 |
| | 2650 | 9.07 | 0.84 | 10.40 | 1.06 | 11.60 | 1.28 | 12.70 | 1.50 | 13.70 | 1.72 | 14.60 | 1.94 | 15.50 | 2.16 |
| | 2950 | 10.10 | 1.13 | 11.30 | 1.37 | 12.40 | 1.61 | 13.40 | 1.85 | 14.40 | 2.08 | 15.30 | 2.32 | 16.10 | 2.56 |
| BAC/ABC 180 | 2100 | 6.43 | 0.37 | 8.19 | 0.55 | 9.65 | 0.73 | 10.90 | 0.92 | 12.10 | 1.11 | 13.10 | 1.30 | 14.10 | 1.50 |
| | 2450 | 7.51 | 0.57 | 9.06 | 0.77 | 10.40 | 0.97 | 11.60 | 1.18 | 12.70 | 1.39 | 13.70 | 1.60 | 14.60 | 1.81 |
| | 2800 | 8.58 | 0.82 | 9.96 | 1.05 | 11.20 | 1.27 | 12.30 | 1.49 | 13.30 | 1.72 | 14.30 | 1.95 | 15.10 | 2.18 |
| | 3150 | 9.65 | 1.14 | 10.90 | 1.38 | 12.00 | 1.63 | 13.10 | 1.87 | 14.00 | 2.12 | 14.90 | 2.36 | 15.80 | 2.61 |
| | 3500 | 10.70 | 1.52 | 11.90 | 1.78 | 12.90 | 2.05 | 13.90 | 2.31 | 14.80 | 2.58 | 15.60 | 2.84 | 16.40 | 3.11 |
| BHC/HBC 180 | 2100 | 6.65 | 0.39 | 8.39 | 0.58 | 9.83 | 0.76 | 11.10 | 0.95 | 12.20 | 1.13 | 13.30 | 1.31 | 14.20 | 1.50 |
| | 2450 | 7.76 | 0.60 | 9.30 | 0.81 | 10.60 | 1.01 | 11.80 | 1.22 | 12.90 | 1.43 | 13.80 | 1.63 | 14.80 | 1.84 |
| | 2800 | 8.87 | 0.86 | 10.20 | 1.09 | 11.50 | 1.32 | 12.50 | 1.55 | 13.60 | 1.78 | 14.50 | 2.01 | 15.40 | 2.24 |
| | 3150 | 9.98 | 1.19 | 11.20 | 1.44 | 12.30 | 1.70 | 13.40 | 1.95 | 14.30 | 2.20 | 15.20 | 2.45 | 16.00 | 2.70 |
| | 3500 | 11.10 | 1.59 | 12.20 | 1.86 | 13.20 | 2.14 | 14.20 | 2.41 | 15.10 | 2.68 | 15.90 | 2.95 | 16.70 | 3.22 |
| BAC/ABC 240/245 | 2900 | 8.58 | 0.86 | 9.96 | 1.09 | 11.20 | 1.32 | 12.30 | 1.55 | 13.30 | 1.78 | 14.20 | 2.01 | 15.10 | 2.25 |
| | 3350 | 9.91 | 1.28 | 11.10 | 1.53 | 12.20 | 1.79 | 13.20 | 2.04 | 14.20 | 2.30 | 15.10 | 2.55 | 15.90 | 2.81 |
| | 3800 | 11.30 | 1.81 | 12.30 | 2.09 | 13.30 | 2.37 | 14.30 | 2.64 | 15.10 | 2.93 | 16.00 | 3.21 | 16.80 | 3.49 |
| | 4250 | 12.60 | 2.46 | 13.60 | 2.76 | 14.50 | 3.07 | 15.30 | 3.37 | 16.10 | 3.67 | 16.90 | 3.98 | 17.70 | 4.28 |
| | 4700 | 13.90 | 3.24 | 14.80 | 3.57 | 15.60 | 3.90 | 16.40 | 4.22 | 17.20 | 4.55 | 17.90 | 4.88 | 18.60 | 5.21 |

See Legend and Notes on page 41.

## Table 5D — Fan Performance Data — 350-600 Pa ESP — SI

| UNIT | AIRFLOW (L/s) | EXTERNAL STATIC PRESSURE (Pa) | | | | | | | | | | | |
|---|---|---|---|---|---|---|---|---|---|---|---|---|---|
| | | 350 | | 400 | | 450 | | 500 | | 550 | | 600 | |
| | | r/s | kW | r/s | kW | r/s | kW | r/s | kW | r/s | kW | r/s | kW |
| BAC/ABC 075 | 850 | 14.10 | 0.67 | 15.00 | 0.74 | 15.70 | 0.81 | 16.50 | 0.87 | 17.20 | 0.94 | — | — |
| | 1000 | 14.60 | 0.77 | 15.40 | 0.84 | 16.10 | 0.91 | 16.90 | 0.98 | 17.60 | 1.06 | — | — |
| | 1150 | 15.10 | 0.88 | 15.90 | 0.96 | 16.60 | 1.03 | 17.30 | 1.11 | 18.00 | 1.18 | — | — |
| | 1300 | 15.60 | 1.01 | 16.40 | 1.09 | 17.10 | 1.17 | 17.80 | 1.25 | 18.40 | 1.32 | — | — |
| | 1450 | 16.10 | 1.15 | 16.90 | 1.24 | 17.60 | 1.32 | 18.30 | 1.40 | 18.90 | 1.48 | — | — |
| BAC/ABC BHC/HBC 090 | 1000 | 14.30 | 0.76 | 15.10 | 0.83 | 15.80 | 0.91 | 16.60 | 0.99 | 17.30 | 1.06 | — | — |
| | 1200 | 14.80 | 0.90 | 15.60 | 0.98 | 16.40 | 1.05 | 17.10 | 1.13 | 17.80 | 1.21 | — | — |
| | 1400 | 15.40 | 1.06 | 16.20 | 1.14 | 16.90 | 1.22 | 17.60 | 1.30 | 18.30 | 1.39 | — | — |
| | 1600 | 16.10 | 1.24 | 16.80 | 1.33 | 17.50 | 1.41 | 18.20 | 1.50 | 18.90 | 1.58 | — | — |
| | 1800 | 16.80 | 1.45 | 17.50 | 1.54 | 18.20 | 1.63 | 18.90 | 1.72 | 19.50 | 1.80 | — | — |
| BAC/ABC 120 | 1450 | 15.30 | 1.07 | 16.10 | 1.15 | 16.80 | 1.24 | 17.50 | 1.32 | 18.20 | 1.40 | 18.80 | 1.48 |
| | 1670 | 16.00 | 1.27 | 16.70 | 1.36 | 17.40 | 1.44 | 18.10 | 1.53 | 18.80 | 1.62 | 19.40 | 1.70 |
| | 1900 | 16.70 | 1.51 | 17.40 | 1.60 | 18.10 | 1.69 | 18.80 | 1.78 | 19.40 | 1.87 | — | — |
| | 2120 | 17.50 | 1.77 | 18.20 | 1.86 | 18.80 | 1.96 | 19.50 | 2.05 | — | — | — | — |
| | 2350 | 18.30 | 2.07 | 19.00 | 2.17 | 19.60 | 2.27 | — | — | — | — | — | — |
| BHC/HBC 120 | 1450 | 15.60 | 1.10 | 16.30 | 1.18 | 17.10 | 1.27 | 17.80 | 1.35 | 18.40 | 1.43 | 19.10 | 1.52 |
| | 1670 | 16.30 | 1.31 | 17.00 | 1.40 | 17.80 | 1.48 | 18.40 | 1.57 | 19.10 | 1.66 | 19.70 | 1.74 |
| | 1900 | 17.10 | 1.56 | 17.80 | 1.65 | 18.50 | 1.74 | 19.20 | 1.83 | 19.80 | 1.92 | — | — |
| | 2120 | 17.90 | 1.83 | 18.60 | 1.93 | 19.30 | 2.02 | 19.90 | 2.11 | — | — | — | — |
| | 2350 | 18.80 | 2.15 | 19.50 | 2.25 | — | — | — | — | — | — | — | — |
| BAC/ABC 150 | 1750 | 14.90 | 1.42 | 15.80 | 1.58 | 16.60 | 1.75 | 17.40 | 1.93 | 18.20 | 2.10 | — | — |
| | 2050 | 15.30 | 1.70 | 16.20 | 1.88 | 17.00 | 2.07 | 17.80 | 2.26 | 18.50 | 2.45 | — | — |
| | 2350 | 15.80 | 2.02 | 16.60 | 2.22 | 17.40 | 2.43 | 18.20 | 2.64 | 18.90 | 2.84 | — | — |
| | 2650 | 16.30 | 2.39 | 17.10 | 2.61 | 17.90 | 2.83 | 18.60 | 3.06 | 19.30 | 3.28 | — | — |
| | 2950 | 16.90 | 2.80 | 17.70 | 3.04 | 18.40 | 3.28 | 19.10 | 3.53 | 19.80 | 3.77 | — | — |
| BAC/ABC 180 | 2100 | 15.00 | 1.70 | 15.80 | 1.90 | 16.70 | 2.11 | 17.40 | 2.32 | 18.20 | 2.53 | 18.90 | 2.74 |
| | 2450 | 15.50 | 2.03 | 16.30 | 2.25 | 17.10 | 2.47 | 17.80 | 2.70 | 18.60 | 2.93 | 19.30 | 3.16 |
| | 2800 | 16.00 | 2.42 | 16.80 | 2.66 | 17.60 | 2.90 | 18.30 | 3.14 | 19.00 | 3.38 | 19.70 | 3.63 |
| | 3150 | 16.60 | 2.87 | 17.40 | 3.12 | 18.10 | 3.38 | 18.80 | 3.64 | 19.50 | 3.90 | — | — |
| | 3500 | 17.20 | 3.38 | 18.00 | 3.65 | 18.70 | 3.93 | 19.40 | 4.20 | — | — | — | — |
| BHC/HBC 180 | 2100 | 15.10 | 1.68 | 16.00 | 1.87 | 16.80 | 2.06 | 17.50 | 2.24 | 18.30 | 2.43 | 19.00 | 2.62 |
| | 2450 | 15.60 | 2.05 | 16.40 | 2.25 | 17.20 | 2.46 | 18.00 | 2.67 | 18.70 | 2.88 | 19.40 | 3.09 |
| | 2800 | 16.20 | 2.47 | 17.00 | 2.69 | 17.80 | 2.92 | 18.50 | 3.15 | 19.20 | 3.38 | 19.80 | 3.61 |
| | 3150 | 16.80 | 2.95 | 17.60 | 3.19 | 18.30 | 3.44 | 19.00 | 3.69 | 19.70 | 3.94 | — | — |
| | 3500 | 17.50 | 3.49 | 18.20 | 3.76 | 19.00 | 4.03 | 19.60 | 4.30 | — | — | — | — |
| BAC/ABC 240/245 | 2900 | 16.00 | 2.49 | 16.80 | 2.73 | 17.50 | 2.97 | 18.30 | 3.22 | 19.00 | 3.47 | 19.70 | 3.72 |
| | 3350 | 16.70 | 3.08 | 17.50 | 3.34 | 18.20 | 3.61 | 18.90 | 3.87 | 19.60 | 4.14 | — | — |
| | 3800 | 17.50 | 3.77 | 18.20 | 4.06 | 18.90 | 4.35 | 19.60 | 4.64 | — | — | — | — |
| | 4250 | 18.40 | 4.59 | 19.10 | 4.90 | 19.80 | 5.21 | — | — | — | — | — | — |
| | 4700 | 19.30 | 5.54 | 20.00 | 5.87 | — | — | — | — | — | — | — | — |

### Legend and Notes for Tables 5C and 5D

**ESP —** External Static Pressure

NOTES:
1. Maximum allowable fan speed is 18.3 r/s for unit sizes 028 and 034; 20 r/s for all other sizes.
2. Fan performance is based on deductions for wet coil, clean 51-mm filters, and unit casing. See table below for factory-supplied filter pressure drop.
3. Refer to fan motor and drive tables for additional data.

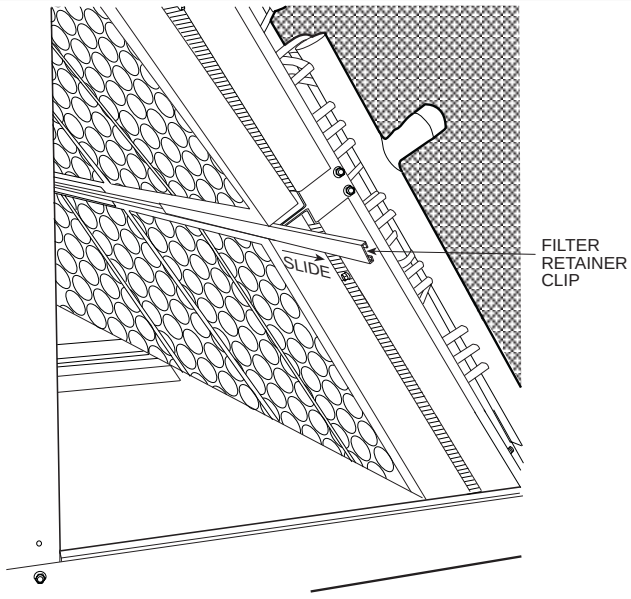


Fig. 20 — Remove Filter Retainer Clip

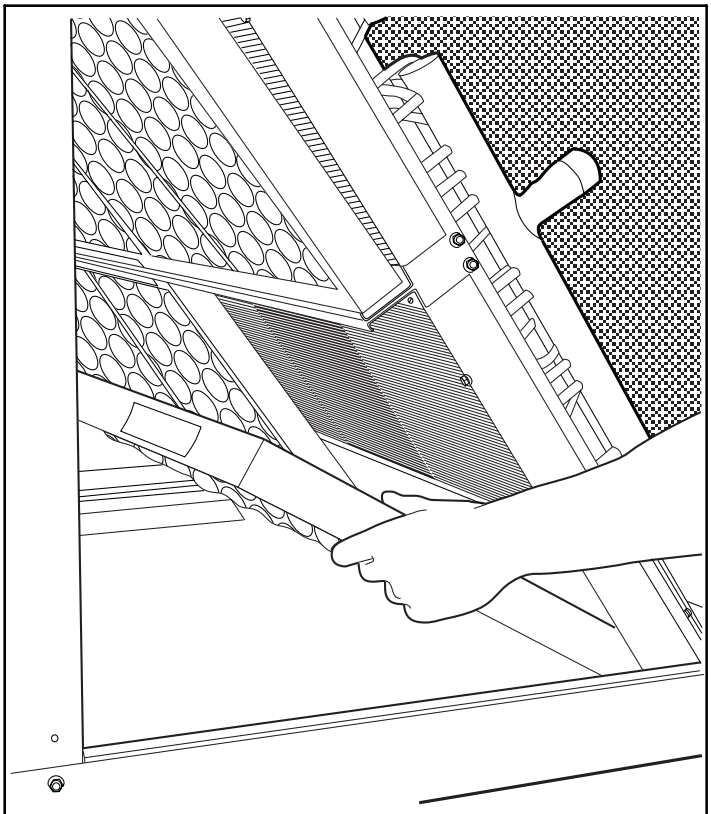

Fig. 21 — Filter Removal/Replacement

**CAUTION**

Do not operate unit without air filters.

**Table 6A:** Factory-Supplied Filter Pressure Drop — English

| UNIT | AIRFLOW (Cfm) | PRESSURE DROP (in. wg) |
|---|---|---|
| BAC/ABC 075 | 1,800 | 0.05 |
| | 2,400 | 0.08 |
| | 3,000 | 0.11 |
| BAC/ABC BHC/HBC 090 | 2,250<br>3,000<br>3,750 | 0.07<br>0.11<br>0.15 |
| BAC/ABC BHC/HBC 120 | 3,000<br>4,000<br>5,000 | 0.11<br>0.17<br>0.23 |
| BAC/ABC 150 | 3,750 | 0.06 |
| | 5,000 | 0.10 |
| | 6,250 | 0.13 |
| BAC/ABC BHC/HBC 180 | 4,500<br>6,000<br>7,500 | 0.08<br>0.12<br>0.17 |
| BAC/ABC 240/245 | 6,000 | 0.12 |
| | 8,000 | 0.19 |
| | 10,000 | 0.26 |

**Table 6B:** Factory-Supplied Filter Pressure Drop — SI

| UNIT | AIRFLOW (L/s) | PRESSURE DROP (Pa) |
|---|---|---|
| BAC/ABC 075 | 850 | 13 |
| | 1150 | 20 |
| | 1450 | 28 |
| BAC/ABC BHC/HBC 090 | 100<br>15000<br>1800 | 17<br>27<br>38 |
| BAC/ABC BHC/HBC 120 | 1450<br>1900<br>2350 | 28<br>42<br>56 |
| BAC/ABC BAC/ABCS 150 | 1750 | 15 |
| | 2350 | 24 |
| | 2950 | 33 |
| BAC/ABC BHC/HBC 180 | 2100<br>2800<br>3500 | 20<br>30<br>42 |
| BAC/ABC 240/245 | 2900 | 32 |
| | 3800 | 47 |
| | 4700 | 64 |

**Replacing Filters** Filters can be removed and installed from either side of the unit. Install new filters in units that have one fan as follows:

1. Remove the side access panel (retain screws).
2. Remove the filter retainer clip (see Fig. 20).
3. Remove old filters by lifting and tilting them out of the filter track. See Fig. 21.
4. Reverse the procedure to install new filters.

To install new filters in larger units that have 2 fans, follow the preceding steps, but use the factory-supplied filter hook to slide filters within reach for removal. The filter hook is shipped inside the unit in the filter track.

# Commercial Packaged Units With Schuller Tuf−Skin RX™ Insulation

## Maintenance Instructions

ELECTRIC SHOCK HAZARD

To avoid the possibility of electrical shock, open and tag all disconnects before performing maintenance on this equipment.

## INTRODUCTION

Schuller Tuf−Skin RX insulation is now a standard feature in many of our units, including 6 to 20 ton packaged air handlers. The Tuf−Skin Rx insulation has an acrylic coating impregnated with an anti−microbial agent. This insulation construction provides an important benefit: The insulation resists the growth of bacteria and fungi, thereby helping to maintain indoor air quality. The insulation also provides other benefits, including reduced noise and elimination of condensate sweating.

The best way to ensure that the packaged unit continues to provide these benefits is t use an efficient, properly maintained filter system. A regular inspection schedule helps to identify potential problems such as incorrect or dirty filters or moisture−causing sources.

## BEFORE CLEANING UNIT

Problems discovered during a routine maintenance inspection can include dirty filters, dirty insulation, moisture leaks, and fungi growth. Other types of problems may be present but not easily detectable. High levels of $CO_2$ and volatile organic compounds are not visible; specialized sensors must be used to detect excessive levels of these pollutants.

Once a problem has been identified, it should be corrected before remedial cleaning is performed. Problem correction may be as simple as replacing filters more frequently or adjusting the slope of the drain pan. More complex problems may require some system modifications. After identifying and correcting problems as necessary, the unit can be cleaned.

## CLEANING METHODS

Before cleaning the inside of the unit, disconnect all unit power. Remove access panels from the sides of the unit to gain accesss to the unit interior. See the base unit installation instructions for panel and interior component locations.

**Cleaning Insulation −** There are several general methods currently in use for cleaning HVAC systems. The three most common and effective methods are contact vacuuming, air washing, and power brushing. Use one of these methods or a combination of these methods to clean the Tuf−Skin Rx insulation.

CONTACT VACUUMING − Use a portable vacuum (shop vac) with a long hose and brush head to remove dirt manually. Maintain light, direct contact between the brush head and the interior insulation surfaces to dislodge and remove dirt. This method can allow the escape of dust and dirt form the equipment during cleaning, because the systems is not subjected to negative pressure.

AIR WASHING − Compressed air can be used to dislodge dirt and debris from the insulation while vacuum equipment collects the dirt downstream. Because this method uses negative pressure, dirt and dust are not as likely to escape from the system during cleaning. Use a long hose with a 'skipper' nozzle to dislodge the dirt so that it becomes airborne and is collected by the vacuum equipment. Limit the air pressure to the nozzle to ensure that the insulation is not damaged.

POWER BRUSHING − Use an electrically or pneumatically powered rotating brush to loosen dirt and debris while collecting the airborne dirt downstream from the unit with vacuum equipment. Use a soft bristle brush with care to ensure that the insulation is not damaged during cleaning. As with the previous air washing method, this method also creates negative pressure so that dirt is not expelled form the system during cleaning.

**When Cleaning Other Areas of the Unit −** Unit components such as coils and drain pans are often cleaned during routine maintenance. Cleaning methods can include the use of cleaning solutions combined with pressure washing to remove accumulated dirt. When pressure washing any are of the unit, do not spray water or cleaning solutions directly on the unit insulation. If the insulation becomes wet, wipe it down with a damp cloth or sponge. Before putting the unit back into service, make sure the insulation and all unit surfaces are full dry.

After the unit interior has been cleaned and dried, problem areas remedied, and filters replaced, reassemble the unit side panes and restore power to the unit.

**Additional Information −** For additional details on cleaning insulated HVAC systems, contact the North American Insulation Manufacturer's Association, Alexandria, VA. Refer to NAIMA's publication no. AH−122, Cleaning Fibrous Glass Insulated Air Duct Systems.

## START-UP CHECKLIST

**(SPLIT SYSTEMS WITH BAC/ABCand BHC/HBC UNITS)**

## I. PRELIMINARY INFORMATION

OUTDOOR: MODEL NO. _____ INDOOR: MODEL NO. _____

SERIAL NO. _____ SERIAL NO. _____

ADDITIONAL ACCESSORIES _____

## II. PRE-START-UP

**OUTDOOR UNIT**

IS THERE ANY SHIPPING DAMAGE?_____ (Y/N) ____

IF SO, WHERE: _____

_____

WILL THIS DAMAGE PREVENT UNIT START-UP? (Y/N) _____

CHECK POWER SUPPLY. DOES IT AGREE WITH UNIT? (Y/N) _____

HAS THE GROUND WIRE BEEN CONNECTED? (Y/N) _____

HAS THE CIRCUIT PROTECTION BEEN SIZED AND INSTALLED PROPERLY? (Y/N) _____

ARE THE POWER WIRES TO THE UNIT SIZED AND INSTALLED PROPERLY? (Y/N) _____

**CONTROLS**

ARE THERMOSTAT(S) AND INDOOR FAN CONTROL WIRING CONNECTIONS MADE AND CHECKED? (Y/N)_____

ARE ALL WIRING TERMINALS (including main power supply) TIGHT? (Y/N) _____

HAVE OUTDOOR UNIT CRANKCASE HEATERS BEEN ENERGIZED FOR 24 HOURS? (Y/N) _____

**INDOOR UNIT**

HAS WATER BEEN PLACED IN DRAIN PAN TO CONFIRM PROPER DRAINAGE? (Y/N) _____

ARE PROPER AIR FILTERS IN PLACE? (Y/N) _____

HAVE FAN AND MOTOR PULLEYS BEEN CHECKED FOR PROPER ALIGNMENT? (Y/N) _____

DO THE FAN BELTS HAVE PROPER TENSION? (Y/N) _____

**PIPING**

BAC/ABC, BHC/HBC

HAS FOAM SHIPPING BLOCK BEEN REMOVED FROM THE TXV (Thermostatic Expansion Valve)? (Y/N) _____

ARE LIQUID LINE SOLENOID VALVES LOCATED AT THE INDOOR UNIT COILS AS REQUIRED? (Y/N) _____

HAVE LEAK CHECKS BEEN MADE AT COMPRESSORS, CONDENSERS, INDOOR COILS, TXVs (Thermostatic Expansion Valves) SOLENOID VALVES, FILTER DRIERS, AND FUSIBLE PLUGS WITH A LEAK DETECTOR? (Y/N) _____

LOCATE, REPAIR, AND REPORT ANY LEAKS. _____

HAVE ALL COMPRESSOR SERVICE VALVES BEEN FULLY OPENED (BACKSEATED) (Y/N) _____

ARE THE COMPRESSOR OIL SIGHT GLASSES SHOWING CORRECT LEVELS? (Y/N) _____

BAC/ABC, BHC/HBC

HAS AIR BEEN BLED FROM SYSTEM? (Y/N) _____

HAVE LEAK CHECKS BEEN MADE AT COMPRESSORS, VALVES, AND INDOOR COILS? (Y/N) _____

LOCATE, REPAIR, AND REPORT ANY LEAKS. _____

**CHECK VOLTAGE IMBALANCE**

LINE-TO-LINE VOLTS: AB _____ V AC _____ V BC _____ V

(AB + AC + BC)/3 = AVERAGE VOLTAGE = _____ V

MAXIMUM DEVIATION FROM AVERAGE VOLTAGE = _____ V

VOLTAGE IMBALANCE = 100 X (MAX DEVIATION)/(AVERAGE VOLTAGE) = _____%

IF OVER 2% VOLTAGE IMBALANCE, DO NOT ATTEMPT TO START SYSTEM!
CALL LOCAL POWER COMPANY FOR ASSISTANCE.

## III. START-UP

CHECK INDOOR FAN MOTOR SPEED AND RECORD.

AFTER AT LEAST 10 MINUTES RUNNING TIME, RECORD THE FOLLOWING MEASUREMENTS:

| | COMP A1 | | COMP B1 |
|---|---|---|---|
| SUCTION PRESSURE | | | |
| SUCTION LINE TEMP | | | |
| DISCHARGE PRESSURE | | | |
| DISCHARGE LINE TEMP | | | |
| ENTERING OUTDOOR UNIT AIR TEMP | | | |
| LEAVING OUTDOOR UNIT AIR TEMP | | | |
| INDOOR UNIT ENTERING AIR DB TEMP | | | |
| INDOOR UNIT ENTERING AIR WB TEMP | | | |
| INDOOR UNIT LEAVING AIR DB TEMP | | | |
| INDOOR UNIT LEAVING AIR WB TEMP | | | |

| | | | |
|---|---|---|---|
| COMPRESSOR AMPS (L1/L2/L3) | ____/____/____ | | ____/____/____ |

NOTES:

## PARTS ILLUSTRATION FOR 6 TO 10 TON UNITS

Parts List For BAC / ABC Units on page 29 & 30
. . . . . BHC / HBC Units on page 31 & 32

Illustration for reference only, your unit may differ from the one shown.

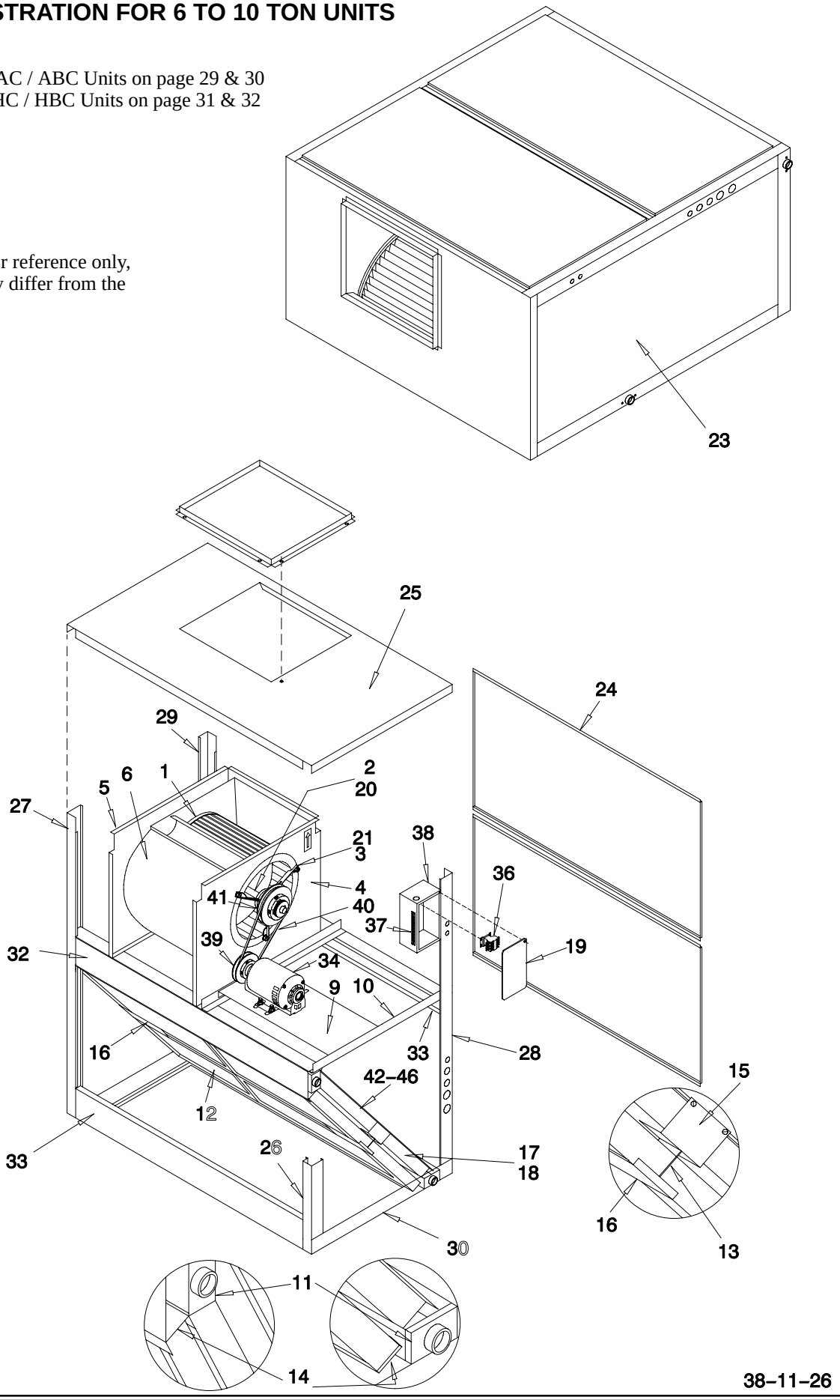

## PARTS ILLUSTRATION FOR 12−1/2 TO 20 TON UNITS

Parts List For BAC / ABC Units on page 29 & 30
. . . . . BHC / HBC Units on page 31 & 32

Illustration for reference only, your unit may differ from the one shown.

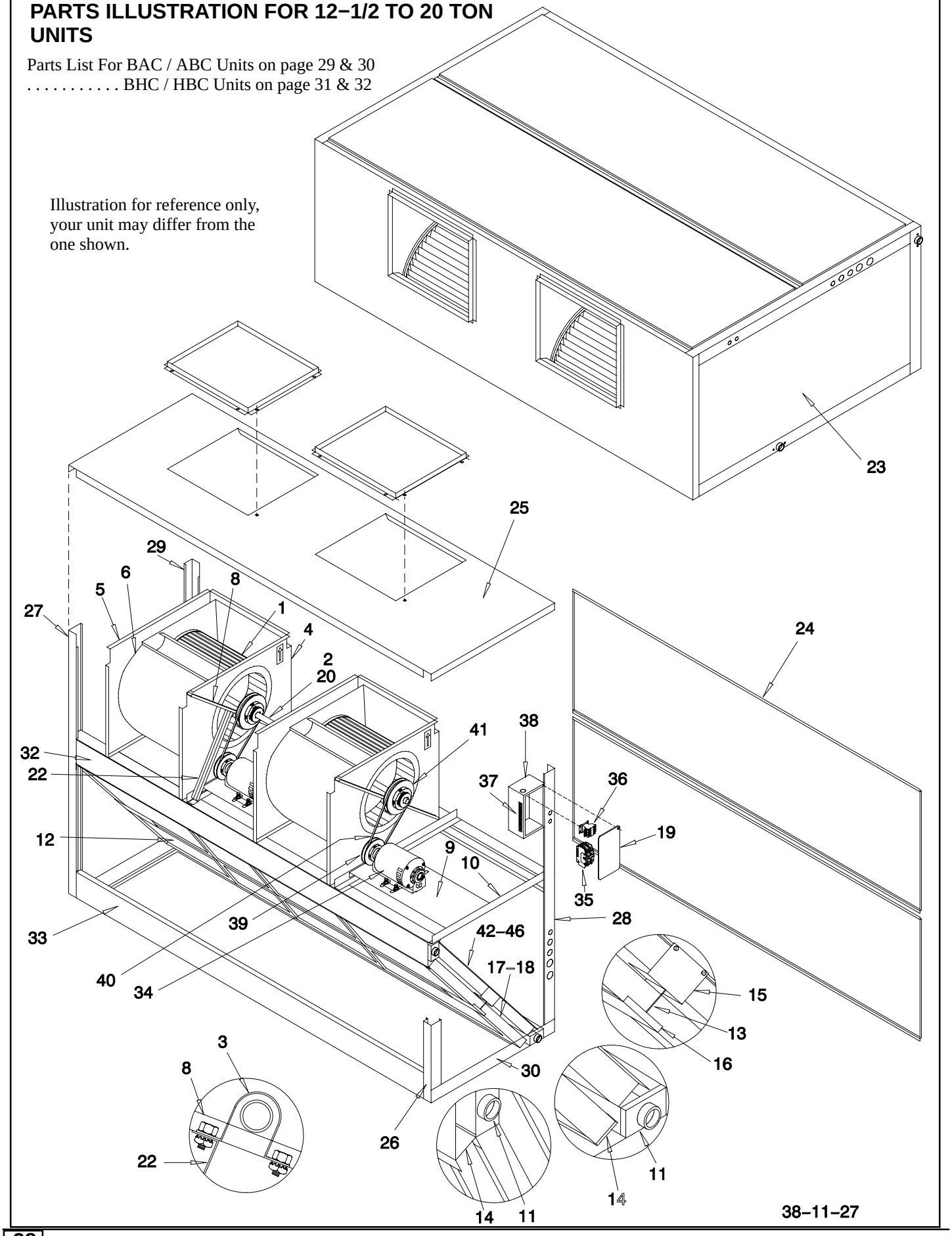

| Key No. | Description | Part Number | BAC075■1AA, ABC075■1AA | BAC075■2AA, ABC075■2AA | BAC075S1AA, ABC075S1AA | BAC075S2AA, ABC075S2AA | BAC090■1AA, ABC090■1AA | BAC090■2AA, ABC090■2AA | BAC0961AA, ABC0961AA | BAC0962AA, ABC0962AA | BAC120■1AA, ABC120■1AA | BAC120■2AA, ABC120■2AA | BAC1201AA, ABC1201AA | BAC1202AA, ABC1202AA | BAC150■1AA, ABC150■1AA | BAC150■2AA, ABC150■2AA | BAC1501AA, ABC1501AA | BAC1502AA, ABC1502AA |
|---|---|---|---|---|---|---|---|---|---|---|---|---|---|---|---|---|---|---|
| 1 | Wheel, Blower | 1170495 | 1 | 1 | 1 | 1 | 1 | 1 | 1 | 1 | 1 | 1 | 1 | 1 | | | | |
| 1 | | 1170496 | | | | | | | | | | | | | 2 | 2 | 2 | 2 |
| 2 | Shaft, Blower | 1170497 | 1 | 1 | 1 | 1 | 1 | 1 | 1 | 1 | 1 | 1 | 1 | 1 | | | | |
| 2 | | 1170498 | | | | | | | | | | | | | 1 | 1 | 1 | 1 |
| 3 | Bearing | 1170499 | 2 | 2 | 2 | 2 | 2 | 2 | 2 | 2 | 2 | 2 | 2 | 2 | | | | |
| 3 | | 1170500 | | | | | | | | | | | | | 2 | 2 | 2 | 2 |
| 4 | Panel, Side Blower | 1170501 | 1 | 1 | 1 | 1 | 1 | 1 | 1 | 1 | 1 | 1 | 1 | 1 | 2 | 2 | 2 | 2 |
| 5 | Panel, Side Blower | 1170502 | 1 | 1 | 1 | 1 | 1 | 1 | 1 | 1 | 1 | 1 | 1 | 1 | 2 | 2 | 2 | 2 |
| 6 | Wrapper, Blower | 1170503 | 1 | 1 | 1 | 1 | 1 | 1 | 1 | 1 | 1 | 1 | 1 | 1 | 2 | 2 | 2 | 2 |
| 8 | Support, Bearing | 1170504 | | | | | | | | | | | | | 2 | 2 | 2 | 2 |
| 9 | Plate, Motor Mount | 1170505 | 1 | 1 | 1 | 1 | 1 | 1 | 1 | 1 | 1 | 1 | 1 | 1 | 1 | 1 | 1 | 1 |
| 10 | Rail, Motor Mount | 1170506 | 2 | 2 | 2 | 2 | 2 | 2 | 2 | 2 | 2 | 2 | 2 | 2 | 2 | 2 | 2 | 2 |
| 11 | Pan, Drain | 1170507 | 2 | 2 | 2 | 2 | 2 | 2 | 2 | 2 | 2 | 2 | 2 | 2 | | | | |
| 11 | | 1170508 | | | | | | | | | | | | | 2 | 2 | 2 | 2 |
| 12 | Filter | 1170509 | 4 | 4 | 4 | 4 | 4 | 4 | 4 | 4 | 4 | 4 | 4 | 4 | 4 | 4 | 4 | 4 |
| 12 | | 1170510 | | | | | | | | | | | | | 4 | 4 | 4 | 4 |
| 13 | Channel, Filter, Middle | 1170511 | 2 | 2 | 2 | 2 | 2 | 2 | 2 | 2 | 2 | 2 | 2 | 2 | | | | |
| 13 | | 1170512 | | | | | | | | | | | | | 2 | 2 | 2 | 2 |
| 14 | Channel, Filter, Top & Bottom | 1170513 | 2 | 2 | 2 | 2 | 2 | 2 | 2 | 2 | 2 | 2 | 2 | 2 | | | | |
| 14 | | 1170514 | | | | | | | | | | | | | 2 | 2 | 2 | 2 |
| 15 | Bracket, Support, Channel | 1170515 | 2 | 2 | 2 | 2 | 2 | 2 | 2 | 2 | 2 | 2 | 2 | 2 | 2 | 2 | 2 | 2 |
| 16 | Retainer, Filter | 1170516 | 2 | 2 | 2 | 2 | 2 | 2 | 2 | 2 | 2 | 2 | 2 | 2 | 2 | 2 | 2 | 2 |
| 17 | Baffle, Header End | 1170517 | 1 | 1 | 1 | 1 | 1 | 1 | 1 | 1 | 1 | 1 | 1 | 1 | 1 | 1 | 1 | 1 |
| 18 | Baffle, Hairpin End | 1170518 | 1 | 1 | 1 | 1 | 1 | 1 | 1 | 1 | 1 | 1 | 1 | 1 | 1 | 1 | 1 | 1 |
| 19 | Cover, Control Box | 1170519 | 1 | 1 | 1 | 1 | 1 | 1 | 1 | 1 | 1 | 1 | 1 | 1 | 1 | 1 | 1 | 1 |
| 20 | Key, Shaft | 1170520 | 1 | 1 | 1 | 1 | 1 | 1 | 1 | 1 | 1 | 1 | 1 | 1 | | | | |
| 20 | | 1170521 | | | | | | | | | | | | | 1 | 1 | 1 | 1 |
| 21 | Bracket, Bearing Mount | 1170522 | 2 | 2 | 2 | 2 | 2 | 2 | 2 | 2 | 2 | 2 | 2 | 2 | | | | |
| 22 | Channel, Support, Bearing | 1170523 | | | | | | | | | | | | | 1 | 1 | 1 | 1 |
| 23 | Panel, End | 1170524 | 2 | 2 | 2 | 2 | 2 | 2 | 2 | 2 | 2 | 2 | 2 | 2 | 2 | 2 | 2 | 2 |
| 24 | Panel, Side | 1170525 | 4 | 4 | 4 | 4 | 4 | 4 | 4 | 4 | 4 | 4 | 4 | 4 | | | | |
| 24 | | 1170526 | | | | | | | | | | | | | 4 | 4 | 4 | 4 |
| 25 | Deck, Blower | 1170527 | 1 | 1 | 1 | 1 | 1 | 1 | 1 | 1 | 1 | 1 | 1 | 1 | | | | |
| 25 | | 1170528 | | | | | | | | | | | | | 1 | 1 | 1 | 1 |
| 26 | Post W/Drain, Motor End | 1170529 | 1 | 1 | 1 | 1 | 1 | 1 | 1 | 1 | 1 | 1 | 1 | 1 | 1 | 1 | 1 | 1 |
| 27 | Post W/Drain, Opposite End | 1170530 | 1 | 1 | 1 | 1 | 1 | 1 | 1 | 1 | 1 | 1 | 1 | 1 | 1 | 1 | 1 | 1 |
| 28 | Post W/Elect. Con. Mtr. End | 1170531 | 1 | 1 | 1 | 1 | 1 | 1 | 1 | 1 | 1 | 1 | 1 | 1 | 1 | 1 | 1 | 1 |
| 29 | Post W/Elect. Con. Opp. End | 1170532 | 1 | 1 | 1 | 1 | 1 | 1 | 1 | 1 | 1 | 1 | 1 | 1 | 1 | 1 | 1 | 1 |
| 30 | Rail, Base, Motor End | 1170533 | 1 | 1 | 1 | 1 | 1 | 1 | 1 | 1 | 1 | 1 | 1 | 1 | 1 | 1 | 1 | 1 |
| 31 | Rail, Base, Opposite End | 1170534 | 1 | 1 | 1 | 1 | 1 | 1 | 1 | 1 | 1 | 1 | 1 | 1 | 1 | 1 | 1 | 1 |
| 32 | Rail, Middle | 1170535 | 1 | 1 | 1 | 1 | 1 | 1 | 1 | 1 | 1 | 1 | 1 | 1 | | | | |
| 32 | | 1170536 | | | | | | | | | | | | | 1 | 1 | 1 | 1 |

| Key No. | Description | Part Number | BAC075■1AA, ABC075■1AA | BAC075■2AA, ABC075■2AA | BAC075S1AA, ABC075S1AA | BAC075S2AA, ABC075S2AA | BAC090■1AA, ABC090■1AA | BAC090■2AA, ABC090■2AA | BAC090S1AA, ABC090S1AA | BAC090S2AA, ABC090S2AA | BAC120■1AA, ABC120■1AA | BAC120■2AA, ABC120■2AA | BAC120S1AA, ABC120S1AA | BAC120S2AA, ABC120S2AA | BAC150■1AA, ABC150■1AA | BAC150■2AA, ABC150■2AA | BAC150S1AA, ABC150S1AA | BAC150S2AA, ABC150S2AA |
|---|---|---|---|---|---|---|---|---|---|---|---|---|---|---|---|---|---|---|
| 33 | Rail, Middle & Base Sides | 11 70 537 | 3 | 3 | 3 | 3 | 3 | 3 | 3 | 3 | 3 | 3 | 3 | 3 | | | | |
| 33 | | 11 70 538 | | | | | | | | | | | | | 3 | 3 | 3 | 3 |
| 34 | Motor, Blower | 11 70 539 | 1 | | | | 1 | | | | 1 | | | | | | | |
| 34 | | 11 70 540 | | 1 | | | | 1 | | | | | | | 1 | | | |
| 34 | | 11 72 438 | | | 1 | | | | | | | | | | | | | |
| 34 | | 11 72 448 | | | | 1 | | | 1 | | | | 1 | | | | | |
| 34 | | 11 71 821 | | | | | | | | 1 | | | | 1 | | | 1 | |
| 34 | | 11 71 852 | | | | | | | | | | | | | | | | 1 |
| 34 | | 11 70 541 | | | | | | | | | | 1 | | | | 1 | | |
| 35 | Circuit Breaker | 11 71 817 | | | | | | | | | | | | | | | | 1 |
| 36 | Contactor | 11 70 548 | 1 | 1 | 1 | 1 | 1 | 1 | 1 | 1 | 1 | 1 | 1 | 1 | 1 | 1 | 1 | 1 |
| 37 | Terminal Board | 11 70 549 | 1 | 1 | 1 | 1 | 1 | 1 | 1 | 1 | 1 | 1 | 1 | 1 | 1 | 1 | 1 | 1 |
| 38 | Box, Control | 11 70 550 | 1 | 1 | 1 | 1 | 1 | 1 | 1 | 1 | 1 | 1 | 1 | 1 | 1 | 1 | 1 | 1 |
| 39 | Pulley, Motor | 11 70 551 | 1 | | 1 | | 1 | | | | 1 | | | | | | | |
| 39 | | 11 70 552 | | 1 | | 1 | | 1 | 1 | 1 | | 1 | 1 | 1 | 1 | 1 | 1 | |
| 39 | | 11 70 699 | | | | | | | | | | | | | | | | 1 |
| 40 | Belt | 11 70 555 | 1 | | 1 | | | | | | | | | | | | | |
| 40 | | 11 70 556 | | | | | 1 | | 1 | | 1 | | 1 | | | | | |
| 40 | | 11 70 557 | | | | | | | | | | | | | 1 | | 1 | |
| 40 | | 11 72 450 | | 1 | | 1 | | | | | | | | | | | | |
| 40 | | 11 70 560 | | | | | | 1 | | 1 | | 1 | | 1 | | | | |
| 40 | | 11 70 561 | | | | | | | | | | | | | | 1 | | |
| 40 | | 11 70 562 | | | | | | | | | | | | | | | | 1 |
| 41 | Pulley, Blower | 11 70 563 | 1 | | 1 | | | | | | | | | | | | | |
| 41 | | 11 70 564 | | | | | 1 | | 1 | | 1 | | 1 | | | | | |
| 41 | | 11 70 565 | | | | | | | | | | | | | 1 | | 1 | |
| 41 | | 11 70 566 | | 1 | | 1 | | | | | | | | | | | | |
| 41 | | 11 70 567 | | | | | | 1 | | 1 | | 1 | | 1 | | | | |
| 41 | | 11 70 568 | | | | | | | | | | | | | | 1 | | 1 |
| 42 | Coil, Evaporator. With TXV | 11 70 572 | 1 | 1 | 1 | 1 | | | | | | | | | | | | |
| 42 | | 11 70 573 | | | | | 1 | 1 | 1 | 1 | | | | | | | | |
| 42 | | 11 70 574 | | | | | | | | | 1 | 1 | 1 | 1 | | | | |
| 42 | | 11 70 575 | | | | | | | | | | | | | 1 | 1 | 1 | 1 |
| 43 | Distributor | 11 70 578 | 1 | 1 | 1 | 1 | | | | | | | | | | | | |
| 43 | | 11 70 579 | | | | | 1 | 1 | 1 | 1 | | | | | | | | |
| 43 | | 11 70 580 | | | | | | | | | 2 | 2 | 2 | 2 | 2 | 2 | 2 | 2 |
| 44 | Nozzle | 11 70 582 | 1 | 1 | 1 | 1 | | | | | | | | | 2 | 2 | 2 | 2 |
| 44 | | 11 70 583 | | | | | 1 | 1 | 1 | 1 | | | | | | | | |
| 44 | | 11 70 584 | | | | | | | | | 2 | 2 | 2 | 2 | | | | |
| 45 | Valve, TXV | 11 71 862 | 1 | 1 | 1 | 1 | 1 | 1 | 1 | 1 | | | | | 2 | 2 | 2 | 2 |
| 45 | | 11 71 783 | | | | | | | | | 2 | 2 | 2 | 2 | | | | |

| Key No. | Description | Part Number | BAC180B1AA ABC180B1AA | BAC180H2AA ABC180H2AA | BAC180L2AA ABC180L2AA | BAC1806 1AA ABC1806 1AA | BAC1806 2AA ABC1806 2AA | BAC240H1AA ABC240H1AA | BAC240H2AA ABC240H2AA | BAC240L1AA ABC240L1AA | BAC240L2AA ABC240L2AA | BAC2406 1AA ABC2406 1AA | BAC2406 2AA ABC2406 2AA | BAC3H1AA ABC3H1AA | BAC3H2AA ABC3H2AA | BAC3L1AA ABC3L1AA | BAC3L2AA ABC3L2AA | BAC3S1AA ABC3S1AA | BAC3S2AA ABC3S2AA |
|---|---|---|---|---|---|---|---|---|---|---|---|---|---|---|---|---|---|---|---|
| 1 | Wheel, Blower | 1170498 | 2 | 2 | 2 | 2 | 2 | 2 | 2 | 2 | 2 | 2 | 2 | 2 | 2 | 2 | 2 | 2 | 2 |
| 2 | Shaft, Blower | 1170499 | 1 | 1 | 1 | 1 | 1 | 1 | 1 | 1 | 1 | 1 | 1 | 1 | 1 | 1 | 1 | 1 | 1 |
| 3 | Bearing | 1170500 | 2 | 2 | 2 | 2 | 2 | 2 | 2 | 2 | 2 | 2 | 2 | 2 | 2 | 2 | 2 | 2 | 2 |
| 4 | Panel, Side Blower | 1170501 | 2 | 2 | 2 | 2 | 2 | 2 | 2 | 2 | 2 | 2 | 2 | 2 | 2 | 2 | 2 | 2 | 2 |
| 5 | Panel, Side Blower | 1170502 | 2 | 2 | 2 | 2 | 2 | 2 | 2 | 2 | 2 | 2 | 2 | 2 | 2 | 2 | 2 | 2 | 2 |
| 6 | Wrapper, Blower | 1170503 | 2 | 2 | 2 | 2 | 2 | 2 | 2 | 2 | 2 | 2 | 2 | 2 | 2 | 2 | 2 | 2 | 2 |
| 8 | Support, Bearing | 1170504 | 2 | 2 | 2 | 2 | 2 | 2 | 2 | 2 | 2 | 2 | 2 | 2 | 2 | 2 | 2 | 2 | 2 |
| 9 | Plate, Motor Mount | 1170505 | 1 | 1 | 1 | 1 | 1 | 1 | 1 | 1 | 1 | 1 | 1 | 1 | 1 | 1 | 1 | 1 | 1 |
| 10 | Rail, Motor Mount | 1170506 | 2 | 2 | 2 | 2 | 2 | 2 | 2 | 2 | 2 | 2 | 2 | 2 | 2 | 2 | 2 | 2 | 2 |
| 11 | Pan, Drain | 1170508 | 2 | 2 | 2 | 2 | 2 | 2 | 2 | 2 | 2 | 2 | 2 | 2 | 2 | 2 | 2 | 2 | 2 |
| 12 | Filter | 1170509 | 4 | 4 | 4 | 4 | 4 | 4 | 4 | 4 | 4 | 4 | 4 | 4 | 4 | 4 | 4 | 4 | 4 |
| 12 | | 1170510 | 4 | 4 | 4 | 4 | 4 | 4 | 4 | 4 | 4 | 4 | 4 | 4 | 4 | 4 | 4 | 4 | 4 |
| 13 | Channel, Filter, Middle | 1170512 | 2 | 2 | 2 | 2 | 2 | 2 | 2 | 2 | 2 | 2 | 2 | 2 | 2 | 2 | 2 | 2 | 2 |
| 14 | Channel, Filter, Top & Bottom | 1170514 | 2 | 2 | 2 | 2 | 2 | 2 | 2 | 2 | 2 | 2 | 2 | 2 | 2 | 2 | 2 | 2 | 2 |
| 15 | Bracket, Support, Channel | 1170515 | 2 | 2 | 2 | 2 | 2 | 2 | 2 | 2 | 2 | 2 | 2 | 2 | 2 | 2 | 2 | 2 | 2 |
| 16 | Retainer, Filter | 1170516 | 2 | 2 | 2 | 2 | 2 | 2 | 2 | 2 | 2 | 2 | 2 | 2 | 2 | 2 | 2 | 2 | 2 |
| 17 | Baffle, Header End | 1170517 | 1 | 1 | 1 | 1 | 1 | 1 | 1 | 1 | 1 | 1 | 1 | 1 | 1 | 1 | 1 | 1 | 1 |
| 18 | Baffle, Hairpin End | 1170518 | 1 | 1 | 1 | 1 | 1 | 1 | 1 | 1 | 1 | 1 | 1 | 1 | 1 | 1 | 1 | 1 | 1 |
| 19 | Cover, Control Box | 1170519 | 1 | 1 | 1 | 1 | 1 | 1 | 1 | 1 | 1 | 1 | 1 | 1 | 1 | 1 | 1 | 1 | 1 |
| 20 | Key, Shaft | 1170521 | 1 | 1 | 1 | 1 | 1 | 1 | 1 | 1 | 1 | 1 | 1 | 1 | 1 | 1 | 1 | 1 | 1 |
| 22 | Channel, Support, Bearing | 1170523 | 1 | 1 | 1 | 1 | 1 | 1 | 1 | 1 | 1 | 1 | 1 | 1 | 1 | 1 | 1 | 1 | 1 |
| 23 | Panel, End | 1170524 | 2 | 2 | 2 | 2 | 2 | 2 | 2 | 2 | 2 | 2 | 2 | 2 | 2 | 2 | 2 | 2 | 2 |
| 24 | Panel, Side | 1170526 | 4 | 4 | 4 | 4 | 4 | 4 | 4 | 4 | 4 | 4 | 4 | 4 | 4 | 4 | 4 | 4 | 4 |
| 25 | Deck, Blower | 1170528 | 1 | 1 | 1 | 1 | 1 | 1 | 1 | 1 | 1 | 1 | 1 | 1 | 1 | 1 | 1 | 1 | 1 |
| 26 | Post W.Drain, Motor End | 1170529 | 1 | 1 | 1 | 1 | 1 | 1 | 1 | 1 | 1 | 1 | 1 | 1 | 1 | 1 | 1 | 1 | 1 |
| 27 | Post W.Drain, Opposite End | 1170530 | 1 | 1 | 1 | 1 | 1 | 1 | 1 | 1 | 1 | 1 | 1 | 1 | 1 | 1 | 1 | 1 | 1 |
| 28 | Post W.Elect. Con. Mtr. End | 1170531 | 1 | 1 | 1 | 1 | 1 | 1 | 1 | 1 | 1 | 1 | 1 | 1 | 1 | 1 | 1 | 1 | 1 |
| 29 | Post W.Elect. Con. Opp. End | 1170532 | 1 | 1 | 1 | 1 | 1 | 1 | 1 | 1 | 1 | 1 | 1 | 1 | 1 | 1 | 1 | 1 | 1 |
| 30 | Rail, Base, Motor End | 1170533 | 1 | 1 | 1 | 1 | 1 | 1 | 1 | 1 | 1 | 1 | 1 | 1 | 1 | 1 | 1 | 1 | 1 |
| 31 | Rail, Base, Opposite End | 1170534 | 1 | 1 | 1 | 1 | 1 | 1 | 1 | 1 | 1 | 1 | 1 | 1 | 1 | 1 | 1 | 1 | 1 |
| 32 | Rail, Middle | 1170536 | 1 | 1 | 1 | 1 | 1 | 1 | 1 | 1 | 1 | 1 | 1 | 1 | 1 | 1 | 1 | 1 | 1 |
| 33 | Rail, Middle & Base Sides | 1170538 | 3 | 3 | 3 | 3 | 3 | 3 | 3 | 3 | 3 | 3 | 3 | 2 | 2 | 2 | 2 | 2 | 2 |
| 34 | Motor, Blower | 1171821 | | | | 1 | | | | | | | | | | | | | |
| 34 | | 1171852 | | | | | 1 | | | | | 1 | | | | | | 1 | |
| 34 | | 1170541 | 1 | | | | | | | | | | | | | | | | |
| 34 | | 1170542 | | 1 | 1 | | | 1 | | 1 | | | | 1 | | 1 | | | |
| 34 | | 1170543 | | | | | | | 1 | | 1 | | | | 1 | | 1 | | |
| 34 | | 1171854 | | | | | | | | | | | 1 | | | | | | 1 |
| 35 | Circuit Breaker | 1170545 | | | 1 | | | | | 1 | | | | | | 1 | | | |
| 35 | | 1170546 | | | | | | | 1 | | | | | | 1 | | | | |
| 35 | | 1171817 | | | | | 1 | | | | | 1 | | | | | | 1 | |
| 35 | | 1170547 | | | | | | | | | 1 | | | | | | 1 | | |
| 35 | | 1171816 | | 1 | | | | 1 | | | | | | 1 | | | | | |
| 35 | | 1171812 | | | | | | | | | | | 1 | | | | | | 1 |
| 36 | Contactor | 1170548 | 1 | 1 | 1 | 1 | 1 | 1 | | 1 | 1 | 1 | 1 | 1 | | 1 | 1 | 1 | 1 |
| 36 | | 1172449 | | | | | | | 1 | | | | | | 1 | | | | |
| 37 | Terminal Board | 1170549 | 1 | 1 | 1 | 1 | 1 | 1 | 1 | 1 | 1 | 1 | 1 | 1 | 1 | 1 | 1 | 1 | 1 |
| 38 | Box, Control | 1170550 | 1 | 1 | 1 | 1 | 1 | 1 | 1 | 1 | 1 | 1 | 1 | 1 | 1 | 1 | 1 | 1 | 1 |
| 39 | Pulley, Motor | 1170552 | 1 | | | 1 | | | | | | | | | | | | | |
| 39 | | 1170553 | | 1 | 1 | | 1 | 1 | | 1 | | 1 | | 1 | | 1 | | 1 | |
| 39 | | 1170554 | | | | | | | 1 | | 1 | | 1 | | 1 | | 1 | | 1 |
| 40 | Belt | 1170558 | 1 | | | 1 | | 1 | | 1 | | 1 | | 1 | | 1 | | 1 | |
| 40 | | 1170561 | | 1 | 1 | | 1 | | | | | | | | | | | | |
| 40 | | 1170562 | | | | | | | 2 | | 2 | | 2 | | 2 | | 2 | | 2 |
| 41 | Pulley, Blower | 1170565 | 1 | | | 1 | | | | | | | | | | | | | |
| 41 | | 1170569 | | 1 | 1 | | 1 | | | | | | | | | | | | |
| 41 | | 1170570 | | | | | | | 1 | | 1 | | 1 | | 1 | | 1 | | 1 |
| 41 | | 1170571 | | | | | | 1 | | 1 | | 1 | | 1 | | 1 | | 1 | |
| 42 | Coil, Evaporator, With TXV | 1170576 | 1 | 1 | 1 | 1 | 1 | | | | | | | | | | | | |
| 42 | | 1170577 | | | | | | 1 | 1 | 1 | 1 | 1 | 1 | | | | | | |
| 42 | | 1172453 | | | | | | | | | | | | 1 | 1 | 1 | 1 | 1 | 1 |
| 43 | Distributor | 1170578 | 2 | 2 | 2 | 2 | 2 | | | | | | | | | | | | |
| 43 | | 1170581 | | | | | | 2 | 2 | 2 | 2 | 2 | 2 | | | | | | |
| 43 | | 1172452 | | | | | | | | | | | | 2 | 2 | 2 | 2 | 2 | 2 |
| 44 | Nozzle | 1170585 | 2 | 2 | 2 | 2 | 2 | | | | | | | | | | | | |
| 44 | | 1170586 | | | | | | 2 | 2 | 2 | 2 | 2 | 2 | 2 | 2 | 2 | 2 | 2 | 2 |
| 45 | Valve, TXV | 1171862 | 2 | 2 | 2 | 2 | 2 | | | | | | | | | | | | |
| 45 | | 1172451 | | | | | | 2 | 2 | 2 | 2 | 2 | 2 | 2 | 2 | 2 | 2 | 2 | 2 |

| Key No. | Description | Part Number | BHC09[illegible]1AA HBC09[illegible]1AA | BHC09[illegible]1BA HBC09[illegible]1BA | BHC09[illegible]2AA HBC09[illegible]2AA | BHC09061AA HBC09061AA | BHC09061BA HBC09061BA | BHC09062AA HBC09062AA | BHC12[illegible]1AA HBC12[illegible]1AA | BHC12[illegible]2AA HBC12[illegible]2AA | BHC12061AA HBC12061AA | BHC12062AA HBC12062AA | BHC18[illegible]1AA HBC18[illegible]1AA | BHC18[illegible]2AA HBC18[illegible]2AA | BHC18[illegible]2AA HBC18[illegible]2AA | BHC18061AA HBC18061AA | BHC18062AA HBC18062AA |
|---|---|---|---|---|---|---|---|---|---|---|---|---|---|---|---|---|---|
| 1 | Wheel, Blower | 1170495 | 1 | 1 | 1 | 1 | 1 | 1 | 1 | 1 | 1 | 1 | | | | | |
| 1 | | 1170496 | | | | | | | | | | | 2 | 2 | 2 | 2 | 2 |
| 2 | Shaft, Blower | 1170497 | 1 | 1 | 1 | 1 | 1 | 1 | 1 | 1 | 1 | 1 | | | | | |
| 2 | | 1170498 | | | | | | | | | | | 1 | 1 | 1 | 1 | 1 |
| 3 | Bearing | 1170499 | 2 | 2 | 2 | 2 | 2 | 2 | 2 | 2 | 2 | 2 | | | | | |
| 3 | | 1170500 | | | | | | | | | | | 2 | 2 | 2 | 2 | 2 |
| 4 | Panel, Side, Blower | 1170501 | 1 | 1 | 1 | 1 | 1 | 1 | 1 | 1 | 1 | 1 | 2 | 2 | 2 | 2 | 2 |
| 5 | Panel, Side, Blower | 1170502 | 1 | 1 | 1 | 1 | 1 | 1 | 1 | 1 | 1 | 1 | 2 | 2 | 2 | 2 | 2 |
| 6 | Wrapper, Blower | 1170503 | 1 | 1 | 1 | 1 | 1 | 1 | 1 | 1 | 1 | 1 | 2 | 2 | 2 | 2 | 2 |
| 8 | Support, Bearing | 1170504 | | | | | | | | | | | 2 | 2 | 2 | 2 | 2 |
| 9 | Plate, Motor Mount | 1170505 | 1 | 1 | 1 | 1 | 1 | 1 | 1 | 1 | 1 | 1 | 1 | 1 | 1 | 1 | 1 |
| 10 | Rail, Motor Mount | 1170506 | 2 | 2 | 2 | 2 | 2 | 2 | 2 | 2 | 2 | 2 | 2 | 2 | 2 | 2 | 2 |
| 11 | Pan, Drain | 1170507 | 2 | 2 | 2 | 2 | 2 | 2 | 2 | 2 | 2 | 2 | | | | | |
| 11 | | 1170508 | | | | | | | | | | | 2 | 2 | 2 | 2 | 2 |
| 12 | Filter | 1170509 | 4 | 4 | 4 | 4 | 4 | 4 | 4 | 4 | 4 | 4 | 4 | 4 | 4 | 4 | 4 |
| 12 | | 1170510 | | | | | | | | | | | 4 | 4 | 4 | 4 | 4 |
| 13 | Channel, Filter, Middle | 1170511 | 2 | 2 | 2 | 2 | 2 | 2 | 2 | 2 | 2 | 2 | | | | | |
| 13 | | 1170512 | | | | | | | | | | | 2 | 2 | 2 | 2 | 2 |
| 14 | Channel, Filter, Top & Bottom | 1170513 | 2 | 2 | 2 | 2 | 2 | 2 | 2 | 2 | 2 | 2 | | | | | |
| 14 | | 1170514 | | | | | | | | | | | 2 | 2 | 2 | 2 | 2 |
| 15 | Bracket, Support, Channel | 1170515 | 2 | 2 | 2 | 2 | 2 | 2 | 2 | 2 | 2 | 2 | 2 | 2 | 2 | 2 | 2 |
| 16 | Retainer, Filter | 1170516 | 2 | 2 | 2 | 2 | 2 | 2 | 2 | 2 | 2 | 2 | 2 | 2 | 2 | 2 | 2 |
| 17 | Baffle, Header End | 1170517 | 1 | 1 | 1 | 1 | 1 | 1 | 1 | 1 | 1 | 1 | 1 | 1 | 1 | 1 | 1 |
| 18 | Baffle, Hairpin End | 1170518 | 1 | 1 | 1 | 1 | 1 | 1 | 1 | 1 | 1 | 1 | 1 | 1 | 1 | 1 | 1 |
| 19 | Cover, Control Box | 1170519 | 1 | 1 | 1 | 1 | 1 | 1 | 1 | 1 | 1 | 1 | 1 | 1 | 1 | 1 | 1 |
| 20 | Key, Shaft | 1170520 | 1 | 1 | 1 | 1 | 1 | 1 | 1 | 1 | 1 | 1 | | | | | |
| 20 | | 1170521 | | | | | | | | | | | 1 | 1 | 1 | 1 | 1 |
| 21 | Bracket, Bearing Mount | 1170522 | 2 | 2 | 2 | 2 | 2 | 2 | 2 | 2 | 2 | 2 | | | | | |
| 22 | Channel, Support, Bearing | 1170523 | | | | | | | | | | | 1 | 1 | 1 | 1 | 1 |
| 23 | Panel, End | 1170524 | 2 | 2 | 2 | 2 | 2 | 2 | 2 | 2 | 2 | 2 | 2 | 2 | 2 | 2 | 2 |
| 24 | Panel, Side | 1170525 | 4 | 4 | 4 | 4 | 4 | 4 | 4 | 4 | 4 | 4 | | | | | |
| 24 | | 1170526 | | | | | | | | | | | 4 | 4 | 4 | 4 | 4 |
| 25 | Deck, Blower | 1170527 | 1 | 1 | 1 | 1 | 1 | 1 | 1 | 1 | 1 | 1 | | | | | |
| 25 | | 1170528 | | | | | | | | | | | 1 | 1 | 1 | 1 | 1 |
| 26 | Post W/Drain, Motor End | 1170529 | 1 | 1 | 1 | 1 | 1 | 1 | 1 | 1 | 1 | 1 | 1 | 1 | 1 | 1 | 1 |
| 27 | Post W/Drain, Opposite End | 1170530 | 1 | 1 | 1 | 1 | 1 | 1 | 1 | 1 | 1 | 1 | 1 | 1 | 1 | 1 | 1 |
| 28 | Post W/Elect. Con. Mtr. End | 1170531 | 1 | 1 | 1 | 1 | 1 | 1 | 1 | 1 | 1 | 1 | 1 | 1 | 1 | 1 | 1 |
| 29 | Post W/Elect. Con. Opp. End | 1170532 | 1 | 1 | 1 | 1 | 1 | 1 | 1 | 1 | 1 | 1 | 1 | 1 | 1 | 1 | 1 |
| 30 | Rail, Base, Motor End | 1170533 | 1 | 1 | 1 | 1 | 1 | 1 | 1 | 1 | 1 | 1 | 1 | 1 | 1 | 1 | 1 |
| 31 | Rail, Base, Opposite End | 1170534 | 1 | 1 | 1 | 1 | 1 | 1 | 1 | 1 | 1 | 1 | 1 | 1 | 1 | 1 | 1 |
| 32 | Rail, Middle | 1170535 | 1 | 1 | 1 | 1 | 1 | 1 | 1 | 1 | 1 | 1 | | | | | |
| 32 | | 1170536 | | | | | | | | | | | 1 | 1 | 1 | 1 | 1 |
| 33 | Rail Middle, & Base Sides | 1170537 | 3 | 3 | 3 | 3 | 3 | 3 | 3 | 3 | 3 | 3 | | | | | |
| 33 | | 1170538 | | | | | | | | | | | 3 | 3 | 3 | 3 | 3 |

| Key No. | Description | Part Number | BHC0000 1AA HBC0000 1AA | BHC0000 1BA HBC0000 1BA | BHC0000 2AA HBC0000 2AA | BHC0006 1AA HBC0006 1AA | BHC0006 1BA HBC0006 1BA | BHC0006 2AA HBC0006 2AA | BHC1200 1AA HBC1200 1AA | BHC1200 2AA HBC1200 2AA | BHC1206 1AA HBC1206 1AA | BHC1206 2AA HBC1206 2AA | BHC1800 1AA HBC1800 1AA | BHC180H 2AA HBC180H 2AA | BHC180L 2AA HBC180L 2AA | BHC1806 1AA HBC1806 1AA | BHC1806 2AA HBC1806 2AA |
|---|---|---|---|---|---|---|---|---|---|---|---|---|---|---|---|---|---|
| 34 | Motor, Blower | 1170539 | 1 | 1 | | | | | 1 | | | | | | | | |
| 34 | | 1170540 | | | 1 | | | | | | | | | | | | |
| 34 | | 1172448 | | | | 1 | 1 | | | | 1 | | | | | | |
| 34 | | 1171821 | | | | | | 1 | | | | 1 | | | | 1 | |
| 34 | | 1170541 | | | | | | | | 1 | | | 1 | | | | |
| 34 | | 1170542 | | | | | | | | | | | | 1 | 1 | | |
| 34 | | 1171852 | | | | | | | | | | | | | | | 1 |
| 35 | Circuit Breaker | 1171816 | | | | | | | | | | | | 1 | | | |
| 35 | | 1170545 | | | | | | | | | | | | | 1 | | |
| 35 | | 1171817 | | | | | | | | | | | | | | | 1 |
| 36 | Contactor | 1170548 | 1 | 1 | 1 | 1 | 1 | 1 | 1 | 1 | 1 | 1 | 1 | 1 | 1 | 1 | 1 |
| 37 | Terminal Board | 1170549 | 1 | 1 | 1 | 1 | 1 | 1 | 1 | 1 | 1 | 1 | 1 | 1 | 1 | 1 | 1 |
| 38 | Box, Control | 1170550 | 1 | 1 | 1 | 1 | 1 | 1 | 1 | 1 | 1 | 1 | 1 | 1 | 1 | 1 | 1 |
| 39 | Pulley, Motor | 1170551 | 1 | | | | | | 1 | | | | | | | | |
| 39 | | 1171420 | | 1 | | | | | | | | | | | | | |
| 39 | | 1170552 | | | 1 | 1 | | 1 | | 1 | 1 | 1 | 1 | | | 1 | |
| 39 | | 1171424 | | | | | 1 | | | | | | | | | | |
| 39 | | 1170553 | | | | | | | | | | | | 1 | 1 | | 1 |
| 40 | Belt | 1170556 | 1 | | | 1 | | | 1 | | 1 | | | | | | |
| 40 | | 1170557 | | 1 | | | 1 | | | | | | | | | | |
| 40 | | 1170558 | | | | | | | | | | | 1 | | | 1 | |
| 40 | | 1170560 | | | 1 | | | 1 | | 1 | | 1 | | | | | |
| 40 | | 1170561 | | | | | | | | | | | | 1 | 1 | | 1 |
| 41 | Pulley, Blower | 1170564 | 1 | | | 1 | | | 1 | | 1 | | | | | | |
| 41 | | 1170563 | | 1 | | | 1 | | | | | | | | | | |
| 41 | | 1170565 | | | | | | | | | | | 1 | | | 1 | |
| 41 | | 1170567 | | | 1 | | | 1 | | 1 | | 1 | | | | | |
| 41 | | 1170569 | | | | | | | | | | | | 1 | 1 | | 1 |
| 42 | Coil, Evaporator. With TXV. | 1170593 | 1 | 1 | 1 | 1 | 1 | 1 | | | | | | | | | |
| 42 | | 1170594 | | | | | | | 1 | 1 | 1 | 1 | | | | | |
| 42 | Used prior to 11/5/02 | 1170595 | | | | | | | | | | | 1 | 1 | 1 | 1 | 1 |
| 42 | Used after 11/4/02 | 1172454 | | | | | | | | | | | 1 | 1 | 1 | 1 | 1 |
| 43 | Distributor | 1170596 | 1 | 1 | 1 | 1 | 1 | 1 | | | | | | | | | |
| 43 | | 1170597 | | | | | | | 2 | 2 | 2 | 2 | | | | | |
| 43 | Used prior to 11/5/02 | 1170598 | | | | | | | | | | | 2 | 2 | 2 | 2 | 2 |
| 43 | Used after 11/4/02 | 1172455 | | | | | | | | | | | 2 | 2 | 2 | 2 | 2 |
| 44 | Nozzle (on 180 prior to 11/5/02) | 1170583 | 1 | 1 | 1 | 1 | 1 | 1 | | | | | 2 | 2 | 2 | 2 | 2 |
| 44 | Used after 11/4/02 | 1170586 | | | | | | | | | | | 2 | 2 | 2 | 2 | 2 |
| 44 | | 1170584 | | | | | | | 2 | 2 | 2 | 2 | | | | | |
| 45 | Valve, TXV | 1171862 | 1 | 1 | 1 | 1 | 1 | 1 | | | | | 2 | 2 | 2 | 2 | 2 |
| 45 | | 1172456 | | | | | | | 2 | 2 | 2 | 2 | | | | | |
| 46 | Valve, Check | 1170602 | 1 | 1 | 1 | 1 | 1 | 1 | 2 | 2 | 2 | 2 | 2 | 2 | 2 | 2 | 2 |