Freedom Air

AHXW3
Product Specifications

FAN COILS

ALL MODELS

- Air Conditioning or Heat Pump ready
- 2, 3, 4, and 5 tons
- Factory installed thermal R−22 TXV
- R−410A TXV accessory available
- Copper tube / aluminum fin coil
- Sweat connections
- Primary and secondary drain fittings
- Multiple electrical entry locations
- Time delay relay (TDR)
- 115V−1−60 Hz supply voltage
- PSC three−speed motor on all models
- Ships in upflow and horizontal left configuration
- Easily field converted to horizontal right
- 1” (25.4mm) throwaway filter standard, accepts standard air filters

Hot Water Heat

- Hot water heat coil installed
- Condensing unit lock out switch installed
- Freeze protection switch installed that can energize an external pump (pump not included)

Warranty

- 5 year parts limited warranty

ARI PERFORMANCE CERTIFIED ARI Standard 210/240 Unitary Heat Pumps

ARI PERFORMANCE CERTIFIED ARI Standard 210/240 Unitary Air Conditioners

Rated in accordance with ARI Standard 210 and/or 240. Certification applies only when used with proper components as listed with ARI.

c UL US LISTED

Model Series	Tons	Nom. BTU	Nom. CFM	Dimensions H x W x D in(mm)	Filter Size in(mm)	Ship Wt Lbs(Kg)
AHXW32400A	2	24,000	800	$39^3/_4$ x $17^1/_2$ x 21 (1010 x 445 x 533)	16 x 20 x 1 (406 x 508 x 25)	144 (65)
AHXW33600A	3	36,000	1200	$49^3/_4$ x $21^1/_2$ x 25 (1264 x 546 x 635)	20 x 25 x 1 (508 x 635 x 25)	192 (87)
AHXW34800A	4	48,000	1600	$49^3/_4$ x $21^1/_2$ x 25 (1264 x 546 x 635)	20 x 25 x 1 (508 x 635 x 25)	192 (87)
AHXW36000A	5	60,000	2000	$49^3/_4$ x $21^1/_2$ x 25 (1264 x 546 x 635)	20 x 25 x 1 (508 x 635 x 25)	192 (87)

Distributed by ICP under the Freedom Air brand name

CLEARANCE AND UNIT DIMENSIONS

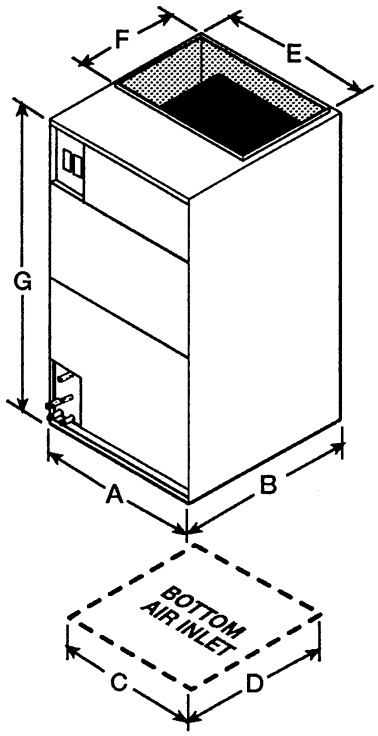

REQUIRED CLEARANCES – in(mm)

All Models	**All Sides**	**0**
	Serviceability from the front	**30(762)**
	From Supply Duct	**0**

DIMENSIONAL DATA

Model	Size (tons)	all dimensions in(mm)											Coil Type	Ship. Weight (lbs)
		A	B	C	D	E	F	G	Hot Water Coil		Liquid O.D.*	Suc-tion O.D.*		
									I.D.*	O.D.*				
AHXW32400	2	$17^1/_2$ (445)	21 (533)	15 (381)	$17^1/_2$ (445)	16 (406)	$12^5/_8$ (321)	$39^3/_4$ (1010)	$^3/_4$ (19)	$^7/_8$ (22)	$^3/_8$ (9.5)	$^3/_4$ (19)	"A"	144 (65)
AHXW33600	3	$21^1/_2$ (546)	25 (635)	$19^1/_4$ (489)	$22^1/_4$ (565)	$19^5/_8$ (498)	$17^1/_4$ (438)	$49^3/_4$ (1264)	$^3/_4$ (19)	$^7/_8$ (22)	$^3/_8$ (9.5)	$^3/_4$ (19)	"A"	192 (87)
AHXW34800	4	$21^1/_2$ (546)	25 (635)	$19^1/_4$ (489)	$22^1/_4$ (565)	$19^5/_8$ (498)	$17^1/_4$ (438)	$49^3/_4$ (1264)	$^3/_4$ (19)	$^7/_8$ (22)	$^3/_8$ (9.5)	$^7/_8$ (22)	"A"	192 (87)
AHXW36000	5	$21^1/_2$ (546)	25 (635)	$19^1/_4$ (489)	$22^1/_4$ (565)	$19^5/_8$ (498)	$17^1/_4$ (438)	$49^3/_4$ (1264)	$^3/_4$ (19)	$^7/_8$ (22)	$^3/_8$ (9.5)	$^7/_8$ (22)	"A"	192 (87)

* Dimensions for copper piping: O.D. is refrigerant tubing and I.D. is plumbing tubing.

PHYSICAL DATA

Model	2400	3600	4800	6000
TXV factory installed				
15% bleed port, bi–flow type for heat pump application TXV	All Models			
Blower Data				
CFM (nominal @ .2 in wc ESP)	800	1310	1740	1900
Motor type (115V)	PSC (Permanent Split Capacitor)			
FLA	3.2	6.2	9.5	9.7
HP	1/4	1/3	3/4	3/4
Refrigerant Line Connections – in(mm) – sweat				
Liquid	3/8 (9.5)	3/8 (9.5)	3/8 (9.5)	3/8 (9.5)
Suction	3/4 (19)	3/4 (19)	7/8 (22)	7/8 (22)

HEATING PERFORMANCE DATA

Model	Heating Nominal SCFM / speed	Heating Capacities @ Entering Water Temperatures						GPM	P.D. Ft. Water
		130 °F	140 °F	150 °F	160 °F	170 °F	180 °F		
AHXW324	800 / H	23,000	26,000	30,300	33,900	37,600	41,200	4.0	1.9
AHXW336	1170 / L	45,000	50,000	60,000	67,000	74,800	82,000	4.0	1.4
AHXW348	1740 / H	59,000	67,000	78,000	88,000	97,000	107,000	4.0	0.8
AHXW360	1900 / H	69,000	80,000	91,000	102,500	113,500	125,000	7.0	2.5

GENERAL SPECIFICATIONS DATA

Model Number	Blower in(mm)	Nominal SCFM @.20 in wc ESP	Nominal Heating BTUH	Cooling Capacity (Tons)
AHXW32400	10 x 6 (254x152)	800	20 – 33,000	1.5 – 2.0
AHXW33600	10 X 8 (254x178)	1330	41 – 50,000	3.0 – 3.5
AHXW34800	11 X 9 (279x229)	1740	43 – 67,000	3.0 – 4.0
AHXW36000	11 X 11 (279x279)	2000	62 – 80,000	5.0

AIRFLOW PERFORMANCE – CFM at a given Speed and Static reading

Model Number	Blower Speed	Measured Static Pressure, inlet to outlet in wc ESP				
		0.10	0.20	0.30	0.40	0.50
AHXW32400	High	850	800	760	720	680
	Medium	825	775	715	690	670
	Low	780	715	655	630	––
AHXW33600	High	1360	1310	1270	1230	1190
	Medium	1340	1250	1170	1090	1060
	Low	1280	1170	1040	970	––
AHXW34800	High	1860	1740	1640	1530	1480
	Medium	1780	1620	1510	1390	1280
	Low	1680	1500	1320	1250	––
AHXW36000	High	1950	1900	1845	1770	1720
	Medium	1820	1750	1620	1470	1440
	Low	1750	1640	1390	1270	––

Notes: (1) Based upon unit with nominal tonnage dry coil and filter installed.
(2) Use .96 as approximate SCFM correction factor for wet coil.
(3) Not recommended for use above .50” in/wc ESP.

ACCESSORIES

Description	Part Number	Use with models
TXV R410A conversion for 2 & 3 ton	AHTXV153A	AHXW32400, AHXW33600
TXV R410A conversion for 4 & 5 ton	AHTXV355A	AHXW24800, AHXW36000
Condensate trap	EBAC01CTK	All sizes
Hot Water Pump	HWP0115A	All sizes

FAN COIL MODEL NUMBER IDENTIFICATION GUIDE

AH X W 3 2400 A 1

AH = Air Handler/Fan Coil

X = TXV — **METERING DEVICE**

W = Hot Water Coil — **COIL TYPE**

3 = SEER — **EFFICIENCY RATING**

2400 = 24,000 BTUH = 2 tons
3600 = 36,000 BTUH = 3 tons
4800 = 48,000 BTUH = 4 tons
6000 = 60,000 BTUH = 5 tons — **NOMINAL CAPACITY**

Sales Code

Engineering Revision

COOLING PERFORMANCE FOR COMBINATION RATINGS					
Outdoor Model	Indoor Model	Factory installed	Cooling (95° F)		SEER
			BTU/hr	EER	Factory
N2A318A(G)KA	AHXW32400A	TDR + TXV	17100	11.0	13.0
N2A324A(G)KA	AHXW32400A	TDR + TXV	22800	11.0	13.0
N2A330A(G)KA	AHXW33600A	TDR + TXV	27800	11.0	13.0
N2A336A(G)KA	AHXW33600A	TDR + TXV	33800	11.0	13.0
N2A342A(G)KA	AHXW34800A	TDR + TXV	40500	11.0	13.5
N2A348A(G)KA	AHXW34800A	TDR + TXV	46000	11.0	13.0
N2A360A(G)KA	AHXW36000A	TDR + TXV	57500	11.0	13.0
N4A318A(G)KA	AHXW32400A	TDR + TXV	17400	11.0	13.0
N4A324A(G)KA	AHXW32400A	TDR + TXV	23000	11.0	13.0
N4A330A(G)KA	AHXW33600A	TDR + TXV	28000	11.0	13.0
N4A336A(G)KA	AHXW33600A	TDR + TXV	34000	11.0	13.0
N4A342A(G)KA	AHXW34800A	TDR + TXV	41000	11.0	13.0
N4A348A(G)KA	AHXW34800A	TDR + TXV	46000	11.0	13.0
N4A360A(G)KA	AHXW36000A	TDR + TXV	57500	11.0	13.0
N4A418A(G)KA	AHXW32400A	TDR + TXV	18000	11.5	14.0
N4A424A(G)KA	AHXW32400A	TDR + TXV	23800	11.5	14.0
N4A430A(G)KA	AHXW33600A	TDR + TXV	29000	11.5	14.0
N4A436A(G)KA	AHXW33600A	TDR + TXV	35800	11.5	14.0
N4A442A(G)KA	AHXW34800A	TDR + TXV	40500	11.5	14.0
N4A448A(G)KA	AHXW34800A	TDR + TXV	48000	11.5	14.0
N4A460A(G)KA	AHXW36000A	TDR + TXV	59000	11.5	14.0
*2A318GKA	AHXW32400A	TDR + TXV	17500	11.0	13.0
*2A324GKA	AHXW32400A	TDR + TXV	24000	11.0	13.0
*2A330GKA	AHXW33600A	TDR + TXV	30000	11.0	13.0
*2A336GKA	AHXW33600A	TDR + TXV	36000	11.0	13.0
*2A342GKA	AHXW34800A	TDR + TXV	41500	11.0	13.5
*2A348GKA	AHXW34800A	TDR + TXV	47000	11.0	13.0
*2A360GKA	AHXW36000A	TDR + TXV	57500	11.0	13.0
*4A318GKA	AHXW32400A	TDR + TXV	17400	11.0	13.0
*4A324GKA	AHXW32400A	TDR + TXV	24000	11.0	13.0
*4A330GKA	AHXW33600A	TDR + TXV	29000	11.0	13.0
*4A336GKA	AHXW33600A	TDR + TXV	34800	11.0	13.0
*4A342GKA	AHXW34800A	TDR + TXV	42000	11.0	13.0
*4A348GKA	AHXW34800A	TDR + TXV	47000	11.0	13.0
*4A360GKA	AHXW36000A	TDR + TXV	59500	11.0	13.0
*4A418GKA	AHXW32400A	TDR + TXV	18000	14.0	14.0
*4A424GKA	AHXW32400A	TDR + TXV	23400	14.0	14.0
*4A430GKA	AHXW33600A	TDR + TXV	29400	14.0	14.0
*4A436GKA	AHXW33600A	TDR + TXV	35400	14.0	14.0
*4A442GKA	AHXW34800A	TDR + TXV	41500	14.5	14.0
*4A448GKA	AHXW34800A	TDR + TXV	48000	14.0	14.0
*4A460GKA	AHXW36000A	TDR + TXV	58500	14.0	14.0

* = Brand (T, H, C)

International Comfort Products, LLC
Lewisburg, Tennessee 37091 USA