TEMPSTAR®
Heating and Cooling Products

FVM4X
Product Specifications

VARIABLE SPEED FAN COILS

ALL MODELS

- 2, 3, 4, and 5 Tons
- Supports two–stage outdoor units
- Available for Environmentally Sound R–410A systems
- Bolt–on, hard shut–off TXV metering device factory installed on all models
- Copper tube / aluminum fin coil
- Sweat connections
- Primary and secondary drain fittings with brass inserts
- Time delay relay (TDR)
- Field installed heater packages from 5 kW – 30 kW available separately
- HUD approved for manufactured housing
- 208/230–1–60 supply voltage
- Multiposition installation – upflow or horizontal left standard, horizontal right with minor modification (field convertible to downflow with accessory kits)
- Filter factory supplied
- Heat staging option
- Humidifier/Humidistat terminals
- 1 inch (25mm) thick insulation with R value of 4.2

PERFORMANCE

- High Efficiency variable speed Electronically Commutated Motor "ECM" on all models
- Adjustable cooling and heating ON/OFF delay
- Heat Pump Comfort option to provide higher than normal heating air delivery temperature
- Units tested and certified by manufacturer to achieve a 2% or less leakage rate at 1.0 inch water column

AHRI CERTIFIED™ www.ahridirectory.org

Use of the AHRI Certified TM Mark indicates a manufacturer's participation in the program. For verification of certification for individual products, go to www.ahridirectory.org .

c UL US LISTED

EASY TO INSTALL AND SERVICE

- Multiple electrical entry locations
- TXV and manifold positioned to the side for easier cleaning
- Zero clearance without heaters

WARRANTY*

- 10 year No Hassle replacement limited warranty
- 5 year parts limited warranty
  - With timely registration, an additional 5 year parts limited warranty

***** Applies to original purchaser/homeowner, some limitations may apply. See Warranty certificate for complete details.

Model Number	Tons	Nominal BTU	CFM (L/s) Range		Dimensions H x W x D in. (mm)	Filter Size in. (mm)	Ship Wt. lbs. (kg)
			Low	High			
FVM4X2400A	2	24,000	350 (165)	1200 (566)	42 1/16 x 17 5/8 x 22 1/16 (1084 x 448 x 560)	16 3/8 x 21 1/2 (416 x 546)	135 (61)
FVM4X3600A	3	36,000	415 (196)	1400 (661)	53 7/16 x 21 1/8 x 22 1/16 (1357 x 537 x 560)	19 7/8 x 21 1/2 (505 x 546)	150 (68)
FVM4X4800A	4	48,000	425 (201)	1600 (755)	53 7/16 x 21 1/8 x 22 1/16 (1357 x 537 x 560)	19 7/8 x 21 1/2 (505 x 546)	172 (78)
FVM4X6000A	5	60,000	540 (255)	2000 (944)	59 3/16 x 24 11/16 x 22 1/16 (1503 x 627 x 560)	23 5/16 x 21 1/2 (592 x 546)	207 (94)

496 21 5101 00 Jan 2010

Specifications are subject to change without notice

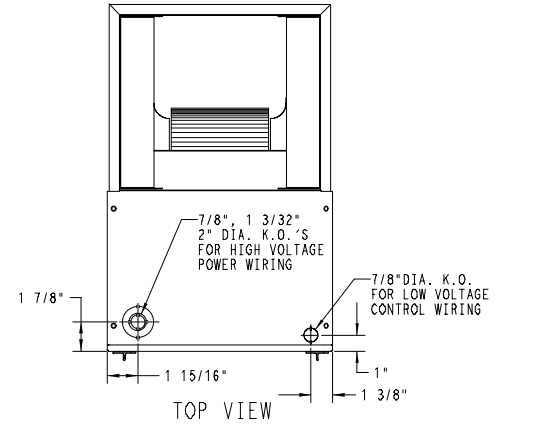

TOP VIEW

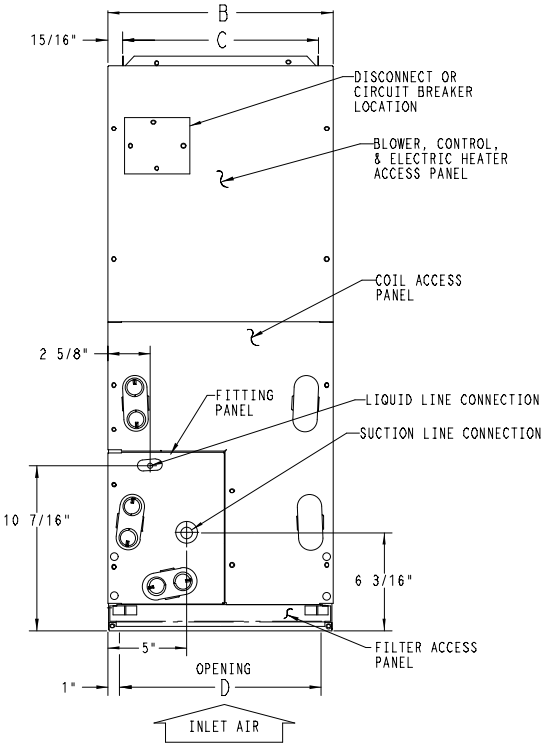

FRONT VIEW

SHOWN WITH "A" COIL DETAILS CONNECTION
LOCATIONS FOR UPFLOW OR HORIZ. APPLICATIONS

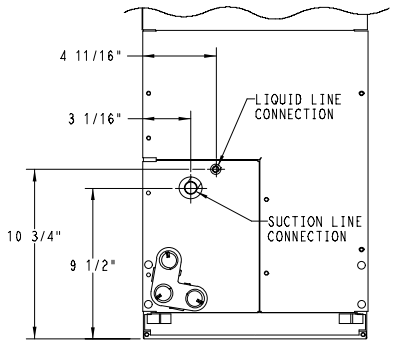

SLOPE COIL DETAILS

CONNECTION LOCATIONS SHOWN
FOR UPFLOW OR HORIZ.
LEFT APPLICATIONS

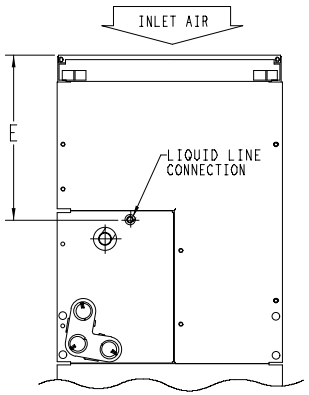

ACCESS PANEL CONFIG. FOR

SLOPE COILS

DOWNFLOW OR HORIZ.
RIGHT APPLICATIONS
AND

"A" COILS

DOWNFLOW APPLICATIONS

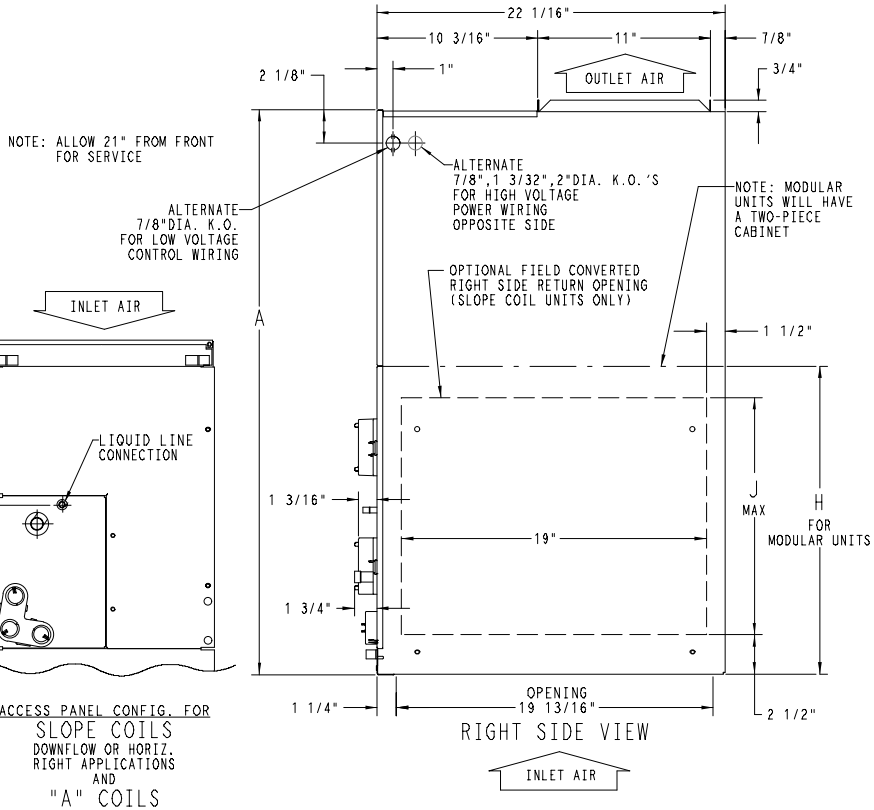

RIGHT SIDE VIEW

Dimensions Inches (English)

NOTES:
1. CONDENSATE PAN DRAIN CAPS NOT SHOWN FOR CLARITY.

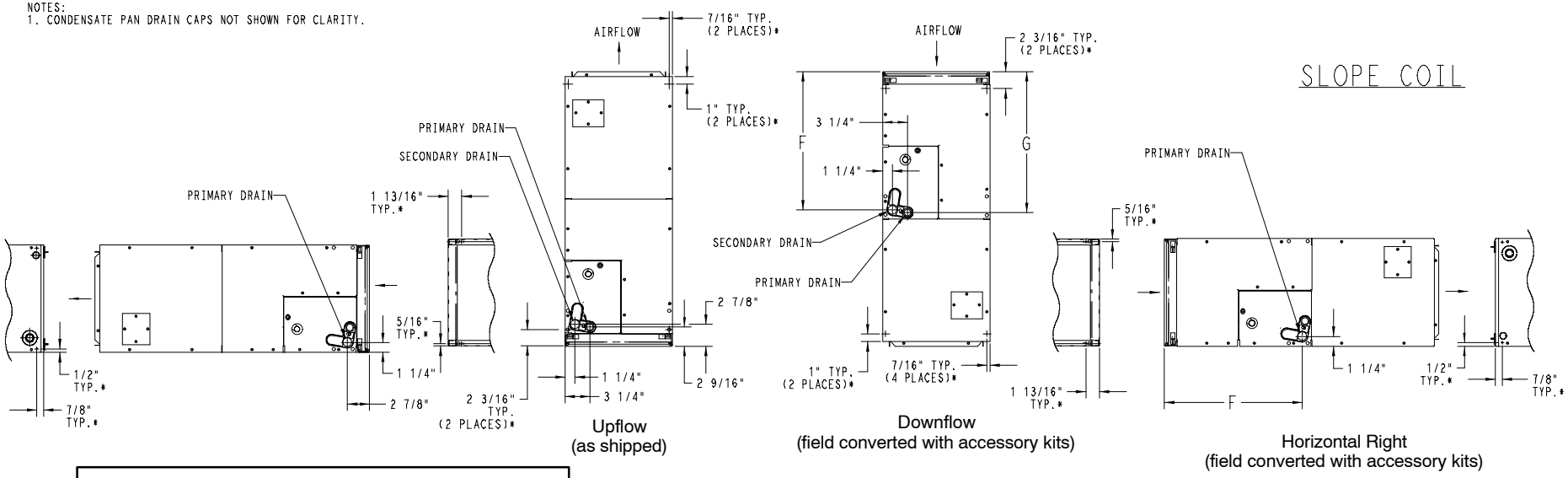

Upflow (as shipped)

Downflow (field converted with accessory kits)

Horizontal Right (field converted with accessory kits)

* HORIZONTAL MOUNT LOCATIONS - DIMPLES PROVIDED IN TOP PANEL, AND BACK OF CABINET. IN CABINET BOTTOM. HOLES PROVIDED .136" DIA. HORIZONTAL HANGING HARDWARE TO BE FIELD SUPPLIED.

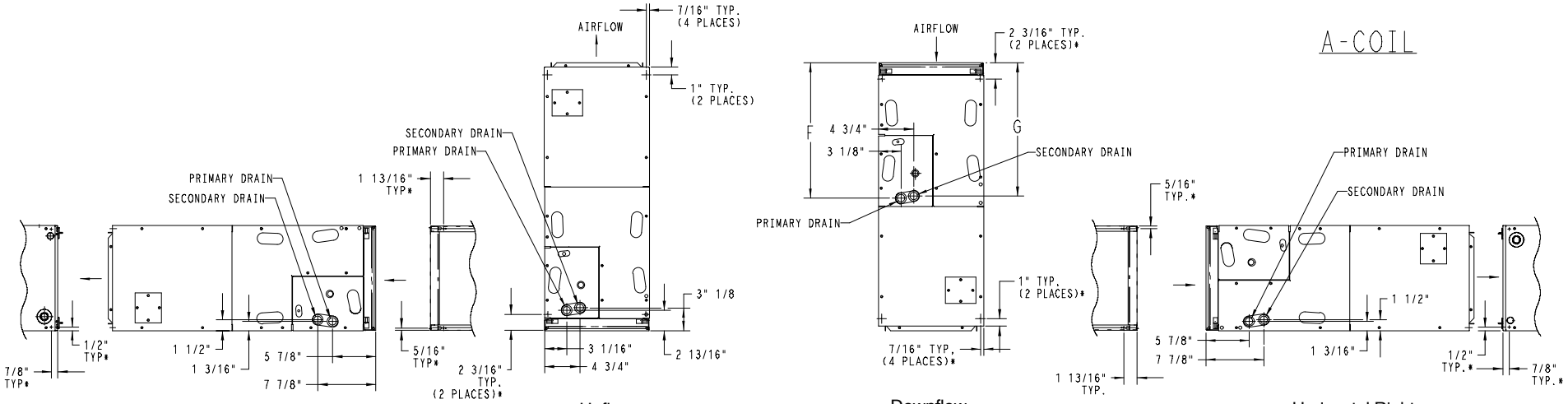

Upflow (as shipped)

Downflow (field converted with accessory kits)

Horizontal Right (field converted with accessory kits)

Dimensions Inches (English)

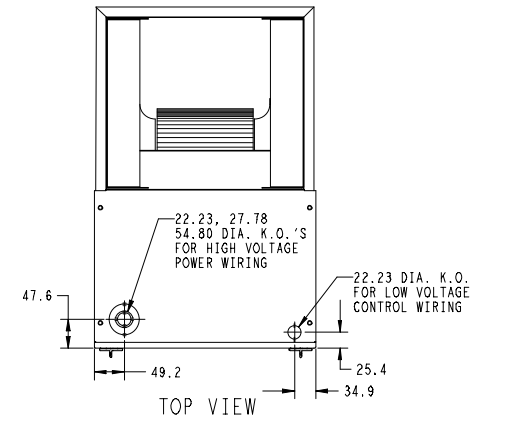

TOP VIEW

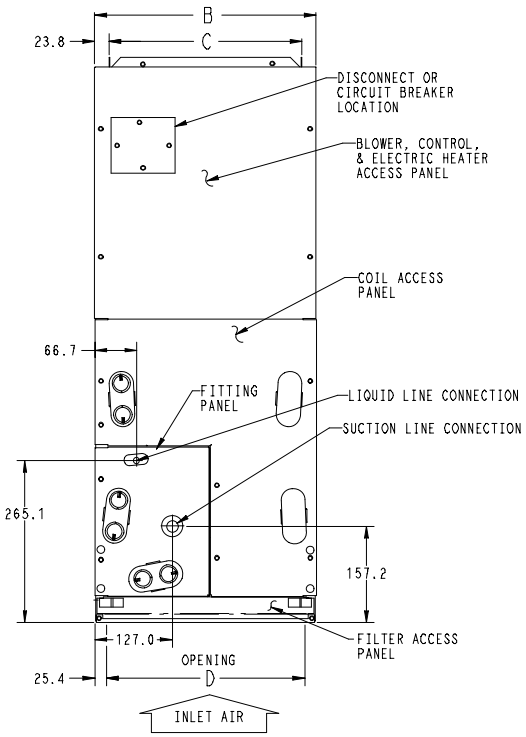

FRONT VIEW
SHOWN WITH "A" COIL DETAILS CONNECTION
LOCATIONS FOR UPFLOW OR HORIZ. APPLICATIONS

UNIT CONNECTION SIZES

SUCTION: 002 & 003 - 19.05 I. D. SWEAT
005 & 006 - 22.23 I. D. SWEAT
LIQUID: 9.53 I.D. SWEAT
CONDENSATE: 19.0 FPT

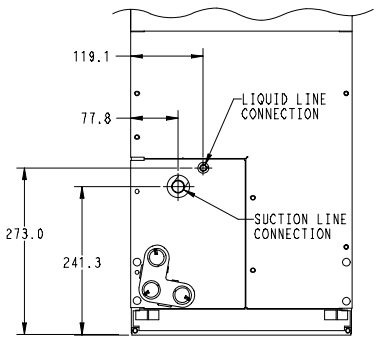

SLOPE COIL DETAILS
CONNECTION LOCATIONS SHOWN
FOR UPFLOW OR HORIZ.
LEFT APPLICATIONS

NOTE: ALLOW 533.4 FROM FRONT
FOR SERVICE

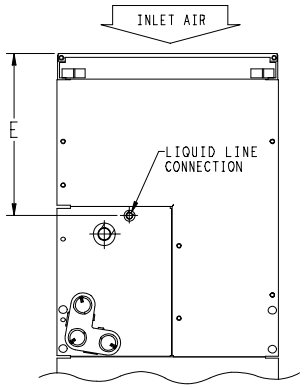

ACCESS PANEL CONFIG. FOR
SLOPE COILS
DOWNFLOW OR HORIZ.
RIGHT APPLICATIONS
AND
"A" COILS
DOWNFLOW APPLICATIONS

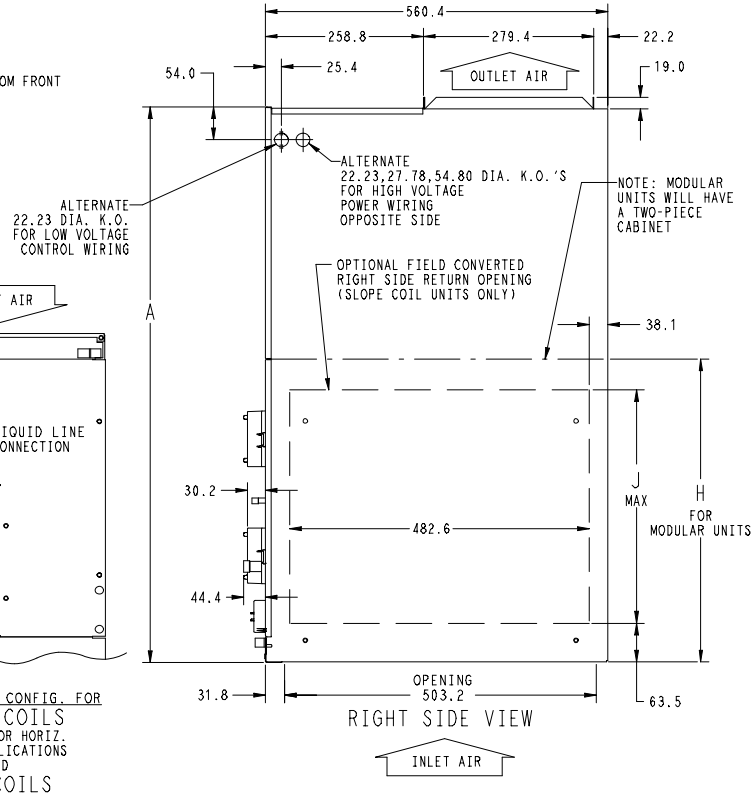

RIGHT SIDE VIEW

Dimensions MM (SI Metric)

SLOPE COIL

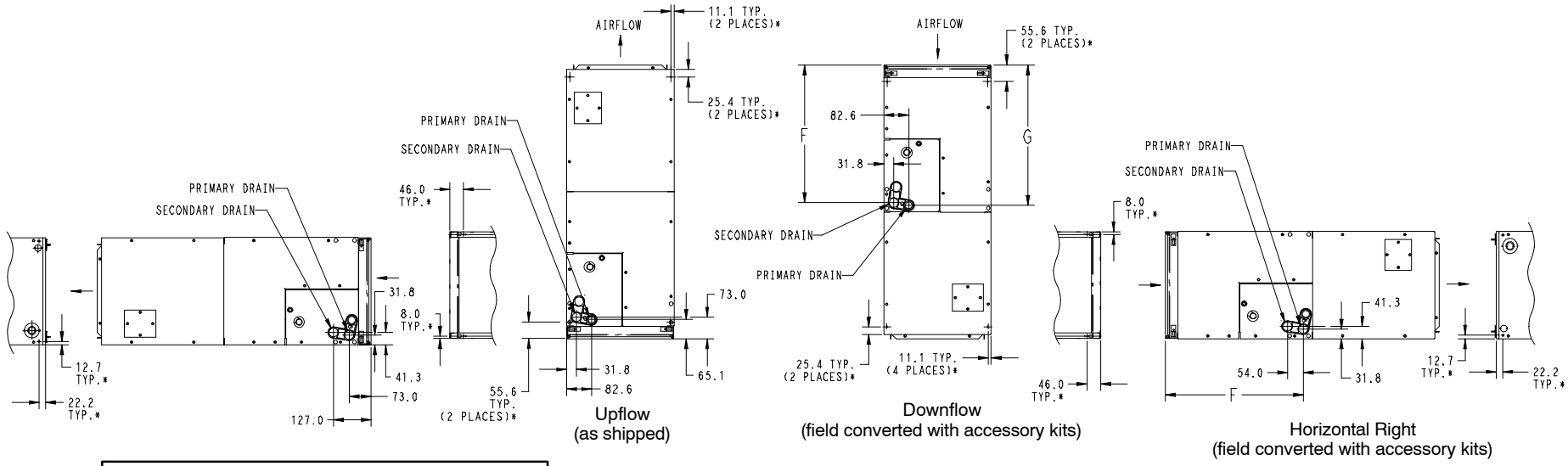

Upflow
(as shipped)

Downflow
(field converted with accessory kits)

Horizontal Right
(field converted with accessory kits)

* HORIZONTAL MOUNT LOCATIONS - DIMPLES PROVIDED IN TOP PANEL, AND BACK OF CABINET. IN CABINET BOTTOM, HOLES PROVIDED 3.45 DIA. HORIZONTAL HANGING HARDWARE TO BE FIELD SUPPLIED.

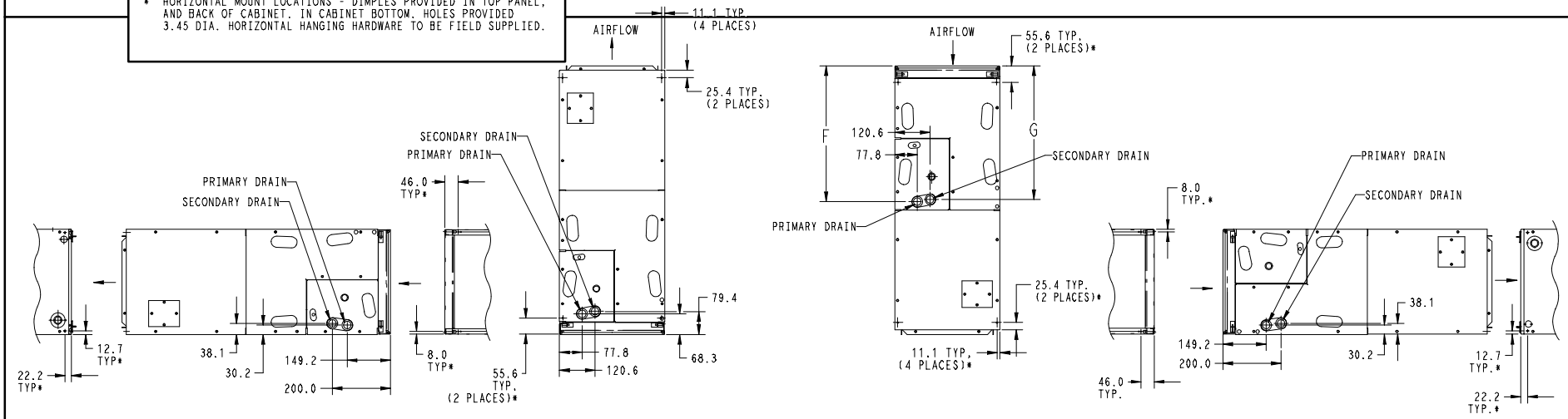

Upflow
(as shipped)

Downflow
(field converted with accessory kits)

Horizontal Right
(field converted with accessory kits)

A-COIL

Dimensions MM (SI Metric)

DIMENSIONAL DATA (refer to drawings on pages 2 & 3)

FVM4X Model	Size (tons)	Dimensions Inches (English)									Coil Type
		A	B	C	D	E	F	G	H	J	
2400A	2	$42^{11}/_{16}$	$17^{5}/_{8}$	$15^{3}/_{4}$	$15^{5}/_{8}$	$10^{3}/_{4}$	$18^{9}/_{16}$	$18^{1}/_{4}$	N/A	N/A	"A"
3600A	3	$53^{7}/_{16}$	$21^{1}/_{8}$	$19^{1}/_{4}$	$19^{1}/_{8}$	$19^{3}/_{16}$	$26^{15}/_{16}$	$27^{1}/_{2}$	N/A	19	Slope
4800A	4	$53^{7}/_{16}$	$21^{1}/_{8}$	$19^{1}/_{4}$	$19^{1}/_{8}$	$19^{1}/_{2}$	$27^{1}/_{4}$	$26^{15}/_{16}$	N/A	N/A	"A"
6000A	5	$59^{3}/_{16}$	$24^{11}/_{16}$	$22^{3}/_{4}$	$22^{11}/_{16}$	$25^{1}/_{4}$	$32^{15}/_{16}$	$32^{5}/_{8}$	$34^{1}/_{16}$	N/A	"A"

FVM4X Model	Size (tons)	Dimensions mm (SI Metric)									Coil Type
		A	B	C	D	E	F	G	H	J	
2400A	2	1084	448	400	397	273	472	464	N/A	N/A	"A"
3600A	3	1357	537	489	486	487	684	699	N/A	483	Slope
4800A	4	1357	537	489	486	495	692	684	N/A	N/A	"A"
6000A	5	1503	627	578	576	641	837	829	865	N/A	"A"

PHYSICAL DATA

FVM4X	Model Size			
	2400	3600	4800	6000
TXV factory installed, hard shut–off, bi–flow type for heat pump application				
	2 ton	3 ton	4 ton	
Blower Data				
Motor type	High Efficiency Variable Speed ECM motor			
HP	1/2	1/2	1/2	3/4
Filter Data				
Filter Size in. (mm)	$16^{3}/_{8}$ x $21^{1}/_{2}$ (416 x 546)	$19^{7}/_{8}$ x $21^{1}/_{2}$ (505 x 546)		$23^{5}/_{16}$ x $21^{1}/_{2}$ (592 x 546)
Coil Data (all coils are 3 row, 14½ fins per inch, wavy lanced bare aluminum fin)				
Face Area ft^2 (m^2)	3.46 (0.32)	3.46 (0.32)	5.93 (0.55)	7.42 (0.69)
Refrigerant Line Connections (sweat)				
Liquid in. (mm)	3/8 (10)	3/8 (10)	3/8 (10)	3/8 (10)
Suction in. (mm)	3/4 (19)	7/8 (22)	7/8 (22)	7/8 (22)

ELECTRICAL DATA, FAN COIL ONLY WITHOUT ELECTRIC HEAT

FVM4X Model	208/230V, single phase, 60 Hz		
	Motor Full Load Amps (**FLA**)	Minimum Circuit Ampacity (**MCA**)	Maximum Fuse/Ckt Bkr Amps (Max OverCurrent Protection – **MOCP**)
2400A	4.3	5.4	15
3600A	4.3	5.4	15
4800A	4.3	5.4	15
6000A	6.8	8.5	15

AIRFLOW PERFORMANCE – CFM RANGE

FVM4X Fan Coil	Use with Outdoor Unit Size	CFM (L/s) Range
2400A	18, 24, 30, 36	350–1200 (165 – 566)
3600A	24, 30, 36, 42	415–1400 (196 – 661)
4800A	30, 36, 42, 48	425–1600 (201 – 755)
6000A	36, 42, 48, 60	540–2000 (255 – 944)

AIRFLOW PERFORMANCE – CFM IN COOLING MODE (A/C or Heat Pump)										
FVM4X Model Size	Outdoor Unit Size	Single Stage Cooling		Two–Stage Cooling				Fan Only		
				High		Low				
		Nominal	Dehum	Nominal	Dehum	Nominal	Dehum	Low	Med	Hi
2400A	18	525	420	Two–Stage outdoor unit not offered				350	420	525
	24	700	560	700	560	560	450	350	560	700
	30	875	700	Two–Stage outdoor unit not offered				440	700	875
	36	1050	840	1050	840	840	670	525	840	1050
3600A	24	700	560	700	560	560	450	415	560	700
	30	875	700	Two–Stage outdoor unit not offered				440	700	875
	36	1050	840	1050	840	840	670	525	840	1050
	42	1225	980	Two–Stage outdoor unit not offered				615	980	1225
4800A	30	875	700	Two–Stage outdoor unit not offered				440	700	875
	36	1050	840	1050	840	840	670	525	840	1050
	42	1225	980	Two–Stage outdoor unit not offered				615	980	1225
	48	1400	1120	1400	1120	1120	900	700	1120	1400
6000A	36	1050	840	1050	840	840	670	540	840	1050
	42	1225	980	Two–Stage outdoor unit not offered				615	980	1225
	48	1400	1120	1400	1120	1120	900	700	1120	1400
	60	1750	1400	1750	1400	1400	1120	875	1400	1750

NOTES:
1. The above airflows result with the AC/HP CFM ADJUST select jumper set on NOM.
2. Airflow can be adjusted +15% or –10% by selecting Hi or Lo respectively for all modes except fan only.
3. Dry coil at 230 volts and with 10kW heater and filter installed.
4. Airflows shown are valid for systems with total external static pressure between 0.1 and 0.7 inches water column.

AIRFLOW PERFORMANCE – CFM IN HEAT PUMP HEATING MODE ONLY										
FVM4X Model Size	Outdoor Unit Size	Single Stage HP Heating		Two–Stage HP Heating				Fan Only		
				High		Low				
		Comfort	Eff	Comfort	Eff	Comfort	Eff	Low	Med	Hi
2400A	18	475	525	Two–Stage outdoor unit not offered				350	380	475
	24	630	700	630	700	505	560	350	505	630
	30	785	875	Two–Stage outdoor unit not offered				440	630	785
	36	945	1050	945	1050	755	840	525	755	945
3600A	24	630	700	630	700	505	560	415	505	630
	30	785	875	Two–Stage outdoor unit not offered				440	630	785
	36	945	1050	945	1050	755	840	525	755	945
	42	1100	1225	Two–Stage outdoor unit not offered				615	880	1100
4800A	30	785	875	Two–Stage outdoor unit not offered				440	630	785
	36	945	1050	945	1050	755	840	525	755	945
	42	1100	1225	Two–Stage outdoor unit not offered				615	880	1100
	48	1260	1400	1260	1400	1010	1120	700	1010	1260
6000A	36	945	1050	945	1050	755	840	540	755	945
	42	1100	1225	Two–Stage outdoor unit not offered				615	880	1100
	48	1260	1400	1260	1400	1010	1120	700	1010	1260
	60	1575	1750	1575	1750	1260	1400	875	1260	1575

NOTES:
1. The above airflows result with the AC/HP CFM ADJUST select jumper set on NOM.
2. Airflow can be adjusted +15% or –10% by selecting Hi or Lo respectively for all modes except fan only.
3. Dry coil at 230 volts and with 10kW heater and filter installed.
4. Airflows shown are valid for systems with total external static pressure between 0.1 and 0.7 inches water column.

ELECTRIC HEATERS		
Part Number	**Description**	**Use with Model Sizes**
EHK05AKN	5 kW, single phase, no internal circuit protection	ALL
EHK05AKB	5 kW, single phase, with circuit breakers	ALL
EHK07AKN	8 kW, single phase, no internal circuit protection	ALL
EHK07AKB	8 kW, single phase, with circuit breakers	ALL
EHK09AKCN	9 kW, supplied as single phase, field convertible to 3–phase, no internal circuit protection	3600, 4800, 6000
EHK10AKN	10 kW, single phase, no internal circuit protection	ALL
EHK10AKB	10 kW, single phase, with circuit breakers	ALL
EHK15AKF	15 kW, single phase, with fuses	ALL
EHK15AKB	15 kW, single phase, with circuit breakers	ALL†
EHK15AHN	15 kW, 3–phase, no internal circuit protection	ALL†
EHK18AHN	18 kW, 3–phase, no internal circuit protection	4800, 6000
EHK20AKF	20 kW, single phase, with fuses	ALL†
EHK20AKB	20 kW, single phase, with circuit breakers	ALL†
EHK25AHCF	24 kW, supplied as 3–phase, field convertible to single phase, with fuses	4800, 6000
EHK30AHCF	30 kW, supplied as 3–phase, field convertible to single phase, with fuses	4800, 6000

† 15kW & 20kW are not recommended for specific heat pump applications, see AIRFLOW DELIVERY (CFM)

AIRFLOW DELIVERY (CFM)													
FVM4X Model Size	**Outdoor Unit Capacity (BTUH)**	**Electric Heater kW Range**											
		0 – 5			**0 – 10**			**0 – 15**			**0 – 20**		
		LO	**NOM**	**HI**	**LO**	**NOM**	**HI**	**LO**	**NOM**	**HI**	**LO**	**NOM**	**HI**
2400A	18	625	625	625	675	675	675	*	*	*	*	*	*
	24	650	725	835	*	725	835	875	875	875	*	*	*
	30	815	905	1040	*	905	1040	900	900	1040	1100	1100	1100
	36	980	1085	1250	980	1085	1250	980	1085	1250	1100	1100	1250
3600A	24	675	725	835	875	875	*	*	*	*	*	*	*
	30	815	905	1040	875	905	1040	1100	1100	1100	*	*	*
	36	980	1085	1250	980	1085	1250	1100	1100	1250	1225	1225	1250
	42	1140	1270	1460	1140	1270	1460	1140	1270	1460	1225	1270	1460
		0 – 10			**0 – 15**			**0 – 20**			**0 – 30**		
4800A	30	975	975	1040	1100	1100	1100	*	*	*	*	*	*
	36	980	1085	1250	1100	1100	1250	1250	1250	1250	*	*	*
	42	1140	1270	1460	1140	1270	1460	1250	1270	1460	*	*	*
	48	1305	1450	1665	1305	1450	1665	1305	1450	1665	1500	1500	1665
6000A	36	1100	1100	1250	1350	1350	1350	*	*	*	*	*	*
	42	1140	1270	1460	1350	1350	1460	1525	1525	1525	*	*	*
	48	1305	1450	1665	1350	1450	1665	1525	1525	1665	1750	1750	1750
	60	1630	1810	2085	1630	1810	2085	1630	1810	2085	1750	1810	2085

* Airflow not recommended for heater/system size
NOTE: LO, NOM, and HI refer to AC/HP CFM ADJUST selection on the control board.

HEAT PUMP MINIMUM CFM WHEN USING ELECTRIC HEAT (CFM)

FVM4X Model Size	Outdoor Unit Size	Heater Size kW				
		5	8, 9, 10	15	18, 20	24, 30
2400A	18	625	625	––	––	––
	24	650	725	875	––	––
	30	800	875	875	1040	––
	36	970	970	970	1040	––
3600A	24	675	875	––	––	––
	30	800	875	1100	1150	––
	36	975	975	1100	1225	––
	42	1125	1125	1125	1225	––
4800A	30	800	875	875	1150	––
	36	975	975	1100	1225	––
	42	1125	1125	1125	1225	––
	48	1305	1305	1305	1305	1400
6000A	36	1100	1100	1350	1350	––
	42	1125	1125	1350	1350	––
	48	1300	1300	1350	1465	1750
	60	1625	1625	1625	1750	1750

A/C MINIMUM CFM WHEN USING ELECTRIC HEAT (CFM)

FVM4X Model Size		Heater Size kW				
		5	8, 9, 10	15	18, 20	24, 30
2400A	Heater Only	625	625	725	875	––
3600A		675	700	850	1050	––
4800A		675	700	850	1050	1400
6000A		1050	1050	1050	1050	1750

NOTES:
1. Heater Only–Air conditioner with electric heater application.
2. These airflows are minimum acceptable airflows as UL listed. Actual airflow delivered will be per airflow delivery chart for Electric Heating Modes.

ACCESSORIES

Description	Part Number	Use with models FVM models
Disconnect Kit	EBAC01DSC	use with All Heaters 5 kW thru 10 kW
Downflow Base Kit	EBAC02NCB	2400
	EBAC03NCB	3600, 4800
	EBAC04NCB	6000
Downflow Conversion Kit – Slope Coil	EBAC01DFS	3600
Downflow Conversion Kit – “A” Coil	EBAC02DFA	2400, 4800, 6000
Single Point Wiring Kit	EBAC01SPK	only for use with 15 kW & 20 kW fused heaters
Single Point Wiring Kit – Square D® Jumper Bar Assembly	AMFK20SPA or Square D® part # QOU14100JBAF	Only for use with EHK15AKB and EHK20AKB breaker heaters
Permanent Filter Kit (box of 12)	EBAC01FKM	2400
	EBAC01FKL	3600, 4800
	EBAC01FKX	6000
No Heat (Plug) Kit (box of 6)	EBAC01PLG	ALL (Factory Installed)
PVC Condensate Trap Kit (box of 50)	EBAC01CTK	ALL
Horizontal/Downflow Gasket Kit	EBAC01GSK	ALL (required for horizontal right and downflow)

TABLE 3 – ELECTRIC HEATER ELECTRICAL DATA

Heater Model	Heater kW		Phase	Internal Circuit Protection	Heater Amps 208/230V			Branch Circuit 208/230V					
								Minimum Circuit Ampacity (MCA) ☆			Max Fuse/Ckt Bkr Amps (Max OverCurrent Protection)		
					Single Circuit	Dual Circuit		Single Circuit	Dual Circuit		Single Cir-cuit	Dual Circuit	
	230V	208V				L1, L2	L3, L4		L1, L2	L3, L4		L1, L2	L3, L4
EHK05AKN*	5	3.8	1	None	18.1 / 20.0	–	–	26.0 / 28.4	–	–	30 / 30	–	–
EHK05AKN**	5	3.8	1	None	18.1 / 20.0	–	–	31.2 / 33.5	–	–	35 / 35	–	–
EHK05AKB*	5	3.8	1	Ckt Bkr	18.1 / 20.0	–	–	26.0 / 28.4	–	–	30 / 30	–	–
EHK05AKB**	5	3.8	1	Ckt Bkr	18.1 / 20.0	–	–	31.2 / 33.5	–	–	35 / 35	–	–
EHK07AKN	8	6.0	1	None	28.9 / 32.0	–	–	44.7 / 48.5	–	–	45 / 50	–	–
EHK07AKB	8	6.0	1	Ckt Bkr	28.9 / 32.0	–	–	44.7 / 48.5	–	–	45 / 50	–	–
EHK09AKCN†	9	6.8	1	None	32.8 / 36.0	–	–	49.5 / 53.5	–	–	50 / 60	–	–
			3	None	18.8 / 20.8	–	–	32.0 / 34.5	–	–	35 / 35	–	–
EHK10AKN	10	7.5	1	None	36.2 / 40.0	–	–	53.8 / 58.5	–	–	60 / 60	–	–
EHK10AKB	10	7.5	1	Ckt Bkr	36.2 / 40.0	–	–	53.8 / 58.5	–	–	60 / 60	–	–
EHK15AKF	15	11.3	1	Fuse	54.2 / 59.9	36.2 / 40.0	18.1 / 20.0	76.3 / 83.4	53.8 / 58.5	22.7 / 25.0	80 / 90	60 / 60	25 / 25
EHK15AKB	15	11.3	1	Ckt Bkr	–	36.2 / 40.0	18.1 / 20.0	–	53.8 / 58.5	22.7 / 25.0	–	60 / 60	25 / 25
EHK15AHN	15	11.3	3	None	31.3 / 34.6	–	–	47.7 / 51.8	–	–	50 / 60	–	–
EHK18AHN	18	13.5	3	None	37.6 / 41.5	–	–	55.5 / 60.4	–	–	60 / 70	–	–
EHK20AKF	20	15.0	1	Fuse	72.3 / 79.9	36.2 / 40.0	36.2 / 40.0	98.9 / 108.4	53.8 / 58.5	45.3 / 50.0	100 / 110	60 / 60	50 / 50
EHK20AKB	20	15.0	1	Ckt Bkr	–	36.2 / 40.0	36.2 / 40.0	–	53.8 / 58.5	45.3 / 50.0	–	60 / 60	50 / 50
EHK25AHCF‡	24	18.0	3	Fuse	50.1 / 55.4	–	–	71.2 / 77.8	–	–	80 / 80	–	–
			1	Fuse	86.7 / 95.5	–	–	116.9 / 127.9	–	–	125 / 150	–	–
EHK30AHCF‡	30	22.5	3	Fuse	62.6 / 69.2	–	–	86.8 / 95.0	–	–	90 / 100	–	–
			1	Fuse	109 /120	–	–	144.8 / 158.5	–	–	150 / 175	–	–

TABLE 4 – FIELD MULTIPOINT WIRING OR 24 AND 30 KW SINGLE PHASE

Heater Model	Heater kW		PHASE	Heater Amps 208/230V			Minimum Circuit Ampacity 208/230V ☆			Minimum Wire Size (AWG) 208/230V‡			Min Gnd Wire Size 208/230 V	Max Fuse/Ckt Bkr Amps 208/230V			Max Wire Length 208/230V (FT)‡‡		
	230V	208V		L1, L2	L3, L4	L5, L6	L1, L2	L3, L4	L5, L6	L1, L2	L3, L4	L5, L6		L1, L2	L3, L4	L5, L6	L1, L2	L3, L4	L5, L6
EHK25AHCF‡	24	18.0	1	28.9/32.0	28.9/32.0	28.9/32.0	44.7/48.5	36.2/40.0	36.2/40.0	8/8	8/8	8/8	10/10	45/50	40/40	40/40	59/60	73/73	73/73
EHK30AHCF‡	30	22.5	1	36.2/40.0	36.2/40.0	36.2/40.0	53.8/58.5	45.3/50.0	45.3/50.0	6/6	8/8	8/8	10/10	60/60	50/50	50/50	78/80	59/59	59/59

Notes:

* When used with Fan Coil model sizes 2400, 3600

** When used with Fan Coil model sizes 4200, 4800, 6000

☆ Includes blower motor amps of largest Fan Coil used with heater

† Supplied as single phase, field convertible to 3 phase

‡ Supplied as 3 phase, field convertible to single phase, single or multiple supply circuits

‡‡ Length shown is as measured one way along wire path between unit and service panel for a voltage drop not to exceed 2%

Specifications are subject to change without notice

FAN COIL MODEL NUMBER IDENTIFICATION GUIDE

F	V	M	4	X	2400	A	1

F = Fan Coil

V = Variable speed ECM motor — **MOTOR TYPE**

M = Multiposition — **INSTALLATION TYPE**

4 = Environmentally Sound R–410A — **REFRIGERANT**

X = TXV — **METERING DEVICE**

2400 = 24,000 BTUH = 2 tons
3600 = 36,000 BTUH = 3 tons
4800 = 48,000 BTUH = 4 tons
6000 = 60,000 BTUH = 5 tons — **NOMINAL CAPACITY**

Sales Code

Engineering Revision

ACCESSORIES PART NUMBER IDENTIFICATION GUIDE

EB	AC	01	NCB	A

EB = Evaporator Blower

AC = Accessory

01 = Product Identifier Number

NCB = Non–Combustible Base Kit
DFK = Down Flow Kit
PLG = Power Plug (no heat kit)
SPK = Single Point Wiring Kit
FKS = Filter Kit Small
FKM = Filter Kit Medium
FKL = Filter Kit Large
FKX = Filter Kit Extra Large
CTK = Condensate Trap Kit (PVC pipe)

Sales Code

ELECTRIC HEATER MODEL NUMBER IDENTIFICATION GUIDE

EHK	05	A	K	N	1

EHK = Electric Heater Kit

05 = 5 kW
07 = 7 kW
09 = 9 kW
10 = 10 kW
15 = 15 kW
18 = 18 kW
20 = 20 kW
25 = 25 kW
30 = 30 kW — **NOMINAL HEAT VALUE**

Sales Code

K = 208 / 230 single–phase
H = 208 / 230, 3–phase
KC = 208 / 230, supplied as single phase, field convertible to 3–phase
HC = 208 / 230 supplied as 3–phase, field convertible to single phase — **VOLTAGE (60 Hz)**

Product Identifier

Engineering Code

International Comfort Products, LLC
Lewisburg, Tennessee 37091 USA
www.GoTempstar.com

Specifications are subject to change without notice