TEMPSTAR®
Heating and Cooling Products

FEM, FSM, FSU
Product Specifications

FAN COILS

ALL MODELS

- 1½ thru 5 tons
- Available for R–22 or Environmentally Sound R–410A systems
- TXV metering device factory installed
- Copper tube / aluminum fin coil
- Sweat connections
- Primary and secondary drain fittings with brass inserts
- 5 amp automotive type fuse on control board
- Multiple electrical entry locations
- Time delay relay (TDR)
- Field installed heater packages from 5 kW – 30 kW available separately
- HUD approved for manufactured housing
- 208/230–1–60 supply voltage
- Units tested and certified by manufacturer to achieve a 2% or less leakage rate at 1.0 inch water column
- 1 inch thick insulation with R value of 4.2

FEM

- High Efficiency, 3–speed, GE X–13 Motor (Brushless Permanent Magnet “BPM”, Electronically Commutated Motor “ECM”) on all models
- Multiposition installation – upflow or horizontal left standard, horizontal right with minor modification (field convertible to downflow with available accessory kit)
- No Heat (Plug) Kit factory installed
- Filter factory supplied

FSM

- PSC 3–speed motor on all models
- Multiposition installation – upflow or horizontal left standard, horizontal right with minor modification (field convertible to downflow with available accessory kit)
- No Heat (Plug) Kit factory installed
- Filter factory supplied

FSU

- PSC 2–speed motor (1½ – 3 ton sizes) and PSC 3–speed motor (3½ – 5 ton sizes)
- Upflow installation (field convertible to downflow or horizontal with available accessory kits)
- Filter available as accessory

Available Styles	FEM	FSM	FSU
Upflow	✓	✓	✓
Horizontal	✓	✓	kit
Downflow	kit	kit	kit
GE X–13 motor	✓		
PSC motor		✓	✓
Filter supplied	✓	✓	

AHRI CERTIFIED™ www.ahridirectory.org

Use of the AHRI Certified TM Mark indicates a manufacturer’s participation in the program. For verification of certification for individual products, go to www.ahridirectory.org .

c UL US LISTED

Model Series	Model Size	Tons	Nom. CFM	Dimensions H x W x D (in.)	Filter Size (in.)	Ship Wt
FEM, FSM, FSU	1800	1½	600	42 11/16 x 14 5/16 x 22⅛	13 x 21½	112 lbs
FEM, FSM, FSU	2400	2	800	47 11/16 x 17⅞ x 22⅛	16⅜ x 21½	120 lbs
FEM	3000	2½	1000	49⅝ x 17⅞ x 22⅛	16⅜ x 21½	122 lbs
FSM, FSU	3000	2½	1000	47 11/16 x 17⅞ x 22⅛	16⅜ x 21½	120 lbs
FEM	3500	3	1200	53 7/16 x 21⅛ x 22⅛	19⅞ x 21½	144 lbs
FEM, FSM	3600	3	1200	49⅝ x 21⅛ x 22⅛	19⅞ x 21½	157 lbs
FSU	3600	3	1200	53 7/16 x 21⅛ x 22⅛	19⅞ x 21½	146 lbs
FEM, FSM, FSU	4200	3½	1400	49⅝ x 21⅛ x 22⅛	19⅞ x 21½	157 lbs
FEM, FSM, FSU	4800	4	1600	53 7/16 x 21⅛ x 22⅛	19⅞ x 21½	175 lbs
FEM, FSM, FSU	6000	5	2000	59 3/16 x 24 11/16 x 22⅛	23 5/16 x 21½	201 lbs

WARRANTY*

	R–410A		R–22
	No Hassle	**Parts Limited Warranty**	**Parts Limited Warranty**
FEM	1 Year	5 year – With timely registration, an additional 5 year.	5 Year
FSM	–	5 year – With timely registration, an additional 5 year.	5 Year
FSU	–	5 year – With timely registration, an additional 5 year.	5 Year

***** Applies to original purchaser/homeowner, some limitations may apply. See Warranty certificate for complete details.

CLEARANCES AND UNIT DIMENSIONS

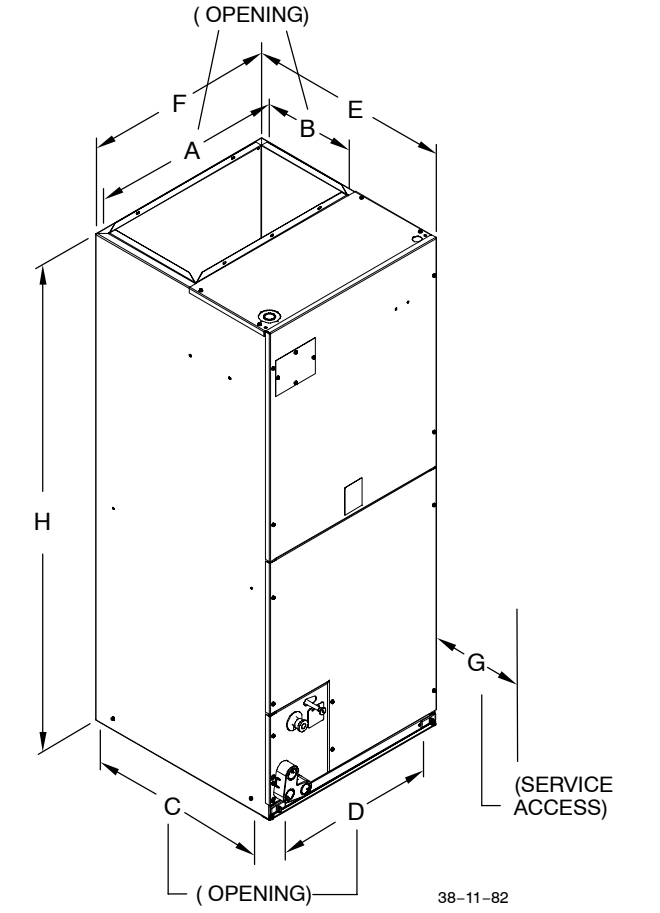

		Inches
No Heaters	All Sides	0
No Heaters	From Supply Duct	0
With Heaters	All Sides	0
	From First 3 feet of Supply Duct to Combustibles	1
	From Supply Duct to Combustibles after 3 feet	0

	ALL MODELS (all dimensions inches)						
Unit Size	A	B	C	D	E	F	G
1800	12 7/16	11	19 13/16	12 5/16	22 1/8	14 5/16	21
2400	15 3/4	11	19 13/16	15 5/8	22 1/8	17 5/8	21
3000	15 3/4	11	19 13/16	15 5/8	22 1/8	17 5/8	21
3500/3600	19 1/4	11	19 13/16	19 1/8	22 1/8	21 1/8	21
4200	19 1/4	11	19 13/16	19 1/8	22 1/8	21 1/8	21
4800	19 1/4	11	19 13/16	19 1/8	22 1/8	21 1/8	21
6000	22 3/4	11	19 13/16	22 11/16	22 1/8	24 11/16	24

	FSU	FSM	FEM
Unit Size	H (inches)		
1800	42 11/16	42 11/16	42 11/16
2400	47 11/16	47 11/16	47 11/16
3000	47 11/16	47 11/16	49 5/8
3500	–	–	53 7/16
3600	53 7/16	49 5/8	49 5/8
4200	49 5/8	49 5/8	49 5/8
4800	53 7/16	53 7/16	53 7/16
6000	59 3/16	59 3/16	59 3/16

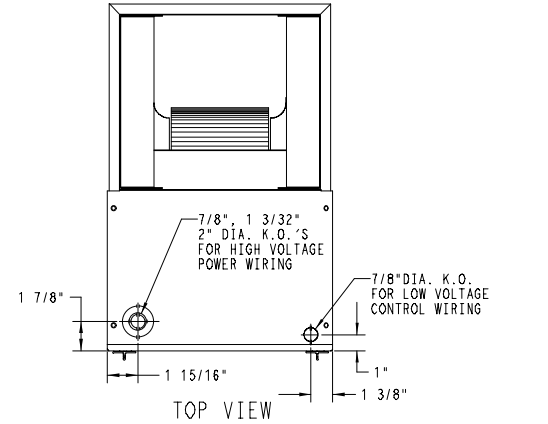

TOP VIEW

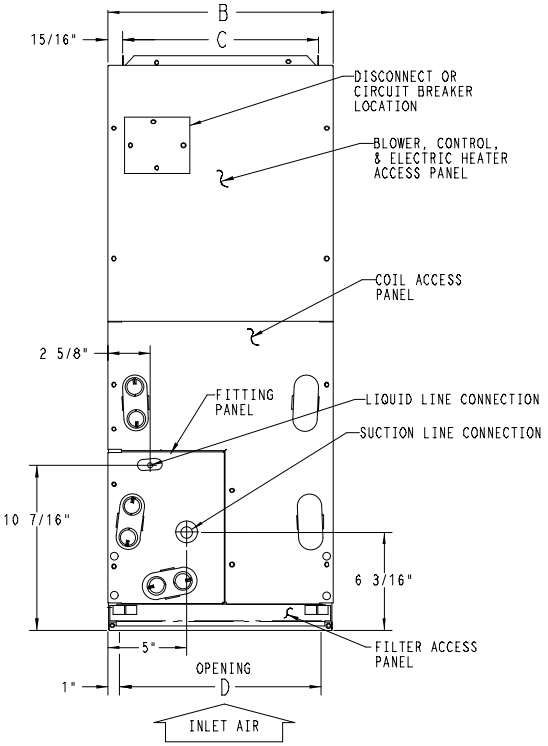

FRONT VIEW
SHOWN WITH "A" COIL DETAILS CONNECTION
LOCATIONS FOR UPFLOW OR HORIZ. APPLICATIONS

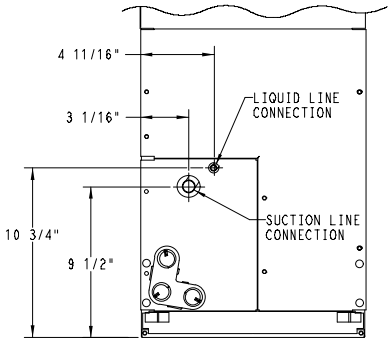

SLOPE COIL DETAILS
CONNECTION LOCATIONS SHOWN
FOR UPFLOW OR HORIZ.
LEFT APPLICATIONS

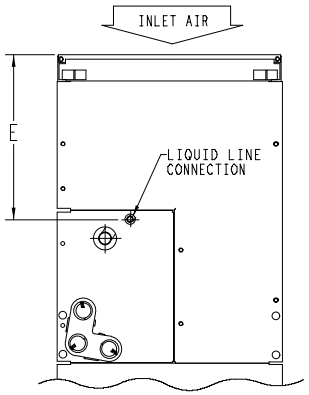

ACCESS PANEL CONFIG. FOR
SLOPE COILS
DOWNFLOW OR HORIZ.
RIGHT APPLICATIONS
AND
"A" COILS
DOWNFLOW APPLICATIONS

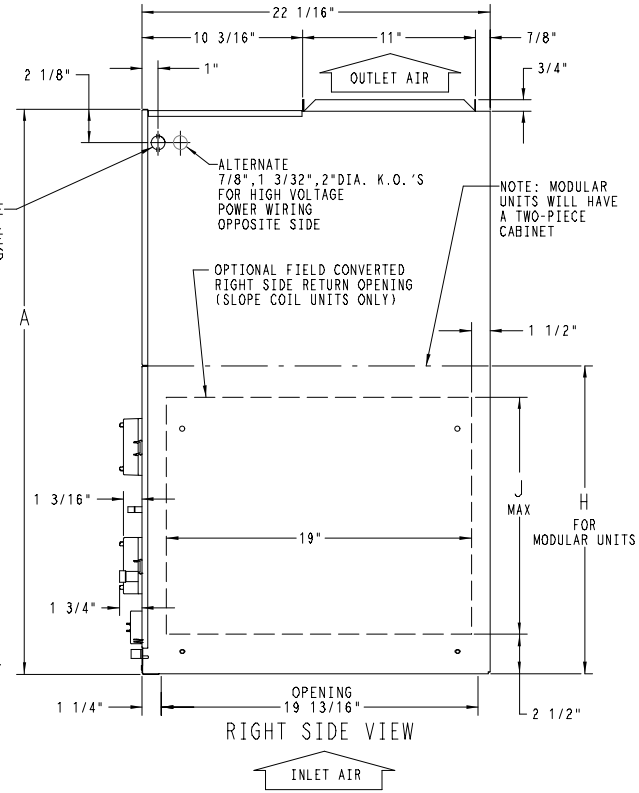

RIGHT SIDE VIEW

NOTES:
1. CONDENSATE PAN DRAIN CAPS NOT SHOWN FOR CLARITY.

SLOPE COIL

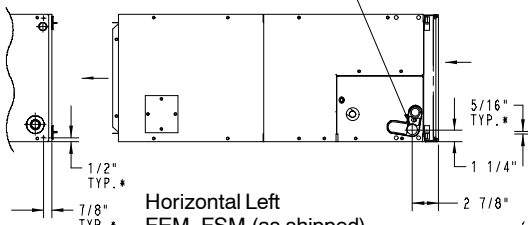

Horizontal Left
FEM, FSM (as shipped)
FSU (field converted with accessory kit)

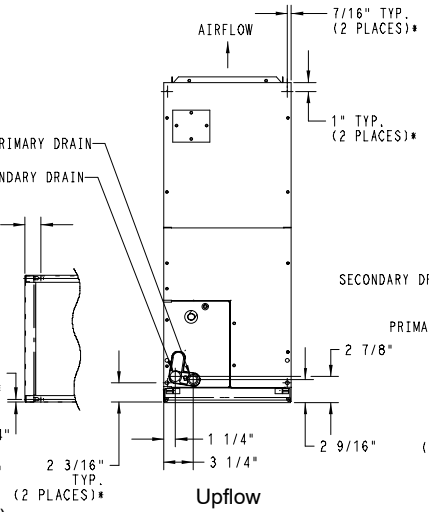

Upflow
(as shipped)

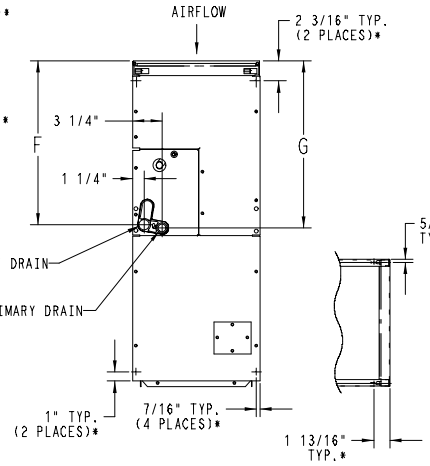

Downflow
(field converted with accessory kits)

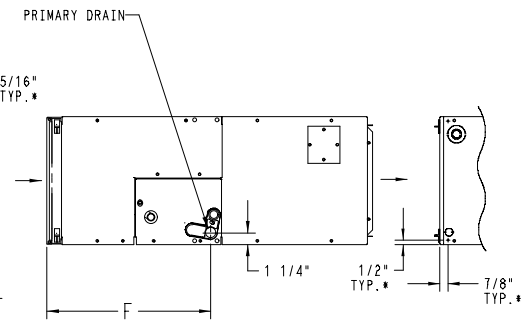

Horizontal Right
(field converted with accessory kits)

* HORIZONTAL MOUNT LOCATIONS - DIMPLES PROVIDED IN TOP PANEL, AND BACK OF CABINET. IN CABINET BOTTOM. HOLES PROVIDED .136" DIA. HORIZONTAL HANGING HARDWARE TO BE FIELD SUPPLIED.

A-COIL

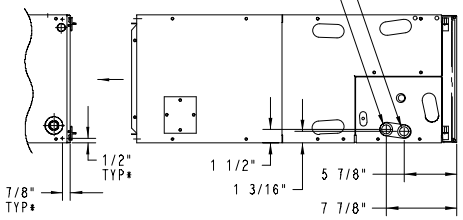

Horizontal Left
FEM, FSM (as shipped)
FSU (field converted with accessory kit)

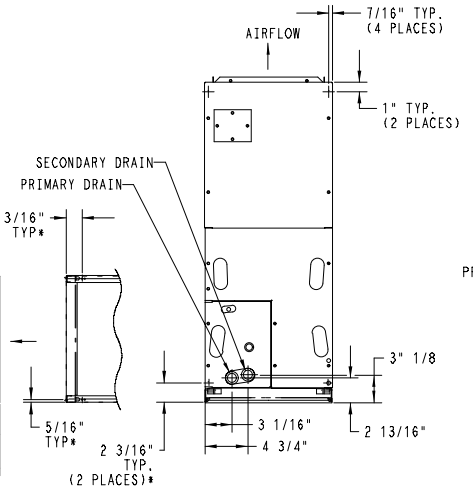

Upflow
(as shipped)

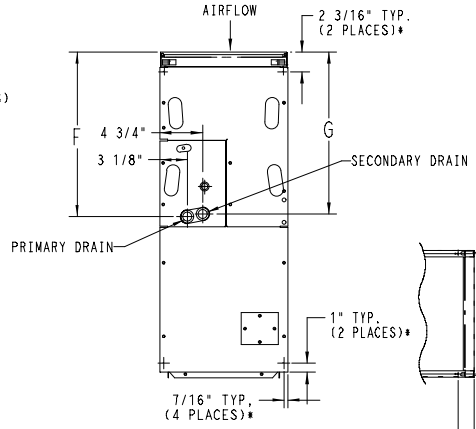

Downflow
(field converted with accessory kits)

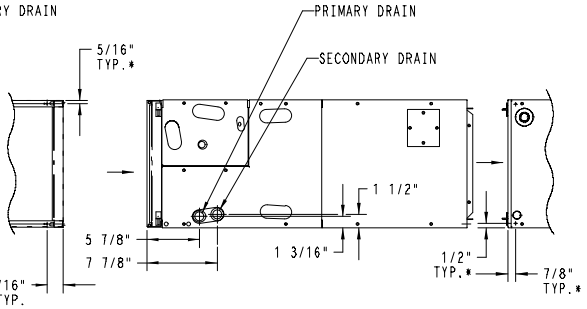

Horizontal Right
(field converted with accessory kits)

DIMENSIONAL DATA (refer to drawings on pages 3 & 4)

Model	Size (tons)	all dimensions inches											Coil Type	Ship. Weight (lbs)
		A	B	C	D	E	F	G	H	J	Suct.	Liquid		
FEM4X1800A FEM2X1800A FSM4X1800A FSM2X1800A	1½	42 11/16	14 15/16	12 7/16	12 5/16	10 7/16	18⅛	18⅝	n/a	12	⅝	⅜	Slope	112
FSU4X1800A FSU2X1800A														
FEM4X2400A FEM2X2400A FSM4X2400A FSM2X2400A	2	47⅝	17⅝	15¾	15⅝	15⅜	23⅛	23⅝	n/a	17	⅝	⅜	Slope	120
FSU4X2400A FSU2X2400A														
FEM4X3000A FEM2X3000A	2½	49⅝	17⅝	15¾	15⅝	15⅜	23⅛	23⅝	n/a	17	¾	⅜	Slope	122
FSM4X3000A FSM2X3000A		47⅝												120
FSU4X3000A FSU2X3000A														122
FEM4X3600A FEM2X3600A FSM4X3600A FSM2X3600A	3	49⅝	21⅛	19¼	19⅛	15 11/16	23 7/16	23⅛	n/a	n/a	¾	⅜	"A"	157
FSU4X3600A FSU2X3600A		53 7/16				19 3/16	26 15/16	27½		19			Slope	146
FEM2X3500A														144
FEM4X4200A FEM2X4200A FSM4X4200A FSM2X4200A	3½	49⅝	21⅛	19¼	19⅛	15 11/16	23 7/16	23⅛	n/a	n/a	⅞	⅜	"A"	157
FSU4X4200A FSU2X4200A														
FEM4X4800A FEM2X4800A FSM4X4800A FSM2X4800A	4	53 7/16	21⅛	19¼	19⅛	19½	27¼	26 15/16	28 5/16	n/a	⅞	⅜	"A"	175
FSU4X4800A FSU2X4800A									n/a					
FEM4X6000A FEM2X6000A FSM4X6000A FSM2X6000A	5	59 3/16	24 11/16	22¾	22 11/16	25¼	32 15/16	32⅝	34 1/16	n/a	⅞	⅜	"A"	201
FSU4X6000A FSU2X6000A														

PHYSICAL DATA							
	Model Size						
	1800	2400	3000 (3500 FEM2X Only)	3600	4200	4800	6000
TXV factory installed, hard shut–off, bi–flow type for heat pump application							
FEM2X	3 ton			5 ton			6 ton
FSM2X	3 ton			5 ton			6 ton
FSU2X	3 ton				5 ton		6 ton
FEM4X	2 ton			3 ton		4 ton	
FSM4X	2 ton			3 ton		4 ton	
FSU4X	2 ton			3 ton		4 ton	
Blower Data							
CFM (nominal)	600	800	1000	1200	1400	1600	2000
Motor type	FEM models = BPM (high efficiency Brushless Permanent Magnet)						
	FSM & FSU models = PSC (Permanent Split Capacitor)						
HP (FEM)	1/3	1/3	1/3	1/2	1/2	3/4	3/4
HP (FSM)	1/4	1/4	1/3	1/3	1/2	3/4	3/4
HP (FSU)	1/6	1/4	1/4	1/3	1/2	3/4	3/4
Filter Data (filters not supplied with FSU units – see Accessories)							
Filter Size	13 x 21½	16⅜ x 21½		19⅞ x 21½			23 5/16 x 21½
Coil Data (all coils 14½ fins per inch, wavy lanced bare aluminum fin)							
FEM, FSM face area (ft^2) (except FEM2X3500)	2.23	2.97		4.45		5.93	7.42
FSU face area (ft^2) (also FEM2X3500)	2.23	2.97		3.46	4.45	5.93	7.42
Refrigerant Line Connections (sweat)							
Liquid (inch)	3/8	3/8	3/8	3/8	3/8	3/8	3/8
Suction (inch)	5/8	5/8	3/4	3/4	7/8	7/8	7/8

ELECTRICAL DATA, FAN COIL ONLY WITHOUT ELECTRIC HEAT			
Model (* = 2 or 4)	208/230V, single phase, 60 Hz		
	Motor Full Load Amps (**FLA**)	Minimum Circuit Ampacity (**MCA**)	Maximum Fuse/Ckt Bkr Amps (Max OverCurrent Protection – **MOCP**)
FEM*X1800	2.8	3.5	15
FSM*X1800, FSU*X1800	1.8	2.3	15
FEM*X2400	2.8	3.5	15
FSM*X2400, FSU*X2400	1.8	2.3	15
FEM*X3000	2.8	3.5	15
FSM*X3000	2.4	3.0	15
FSU*X3000	1.5	1.9	15
FEM2X3500, FEM*X3600	4.1	5.1	15
FSM*X3600	2.7	3.4	15
FSU*X3600	2.4	3.0	15
FEM*X4200	4.1	5.1	15
FSM*X4200, FSU*X4200	2.9	3.6	15
FEM*X4800	5.9	7.4	15
FSM*X4800, FSU*X4800	4.3	5.4	15
FEM*X6000	5.9	7.4	15
FSM*X6000, FSU*X6000	5.2	6.5	15

AIRFLOW PERFORMANCE – CFM at a given Speed and Static reading							
Model (* = 2 or 4)	Blower Speed	Measured Static Pressure, inlet to outlet (inches water column)					
		0.10	0.20	0.30	0.40	0.50	0.60
FEM*X1800	High	766	739	706	666	619	566
	Medium	701	659	619	578	538	499
	Low	614	572	530	486	441	396
FSM*X1800	High	913	863	807	745	676	601
	Medium	852	810	758	696	625	544
	Low	643	623	584	529	456	366
FSU*X1800	High	852	810	758	696	625	544
	Low	643	623	584	529	456	366
FEM*X2400	High	941	905	868	830	792	753
	Medium	823	786	747	707	665	622
	Low	633	583	533	482	431	378
FSM*X2400	High	1055	991	926	860	793	724
	Medium	934	878	818	754	686	614
	Low	690	666	633	591	538	476
FSU*X2400	High	1055	991	926	860	793	724
	Low	934	878	818	754	686	614
FEM*X3000	High	1130	1097	1063	1028	992	955
	Medium	1033	1000	965	928	888	846
	Low	840	802	760	713	663	609
FSM*X3000	High	1167	1112	1048	977	896	808
	Medium	1070	1032	978	908	822	721
	Low	910	888	849	791	715	621
FSU*X3000	High	1070	1032	978	908	822	721
	Low	910	888	849	791	715	621
FEM2X3500	High	1437	1398	1354	1308	1257	1204
	Medium	1282	1238	1192	1142	1090	1036
	Low	1168	1118	1067	1014	959	903
FEM*X3600	High	1479	1437	1392	1344	1293	1240
	Medium	1327	1282	1236	1187	1135	1081
	Low	1192	1151	1100	1039	970	890
FSM*X3600	High	1650	1598	1541	1478	1410	1335
	Medium	1450	1412	1367	1313	1252	1183
	Low	1235	1208	1173	1132	1084	1029
FSU*X3600	High	1352	1316	1273	1223	1167	1103
	Low	1137	1112	1081	1043	998	946
FEM*X4200	High	1616	1578	1533	1480	1420	1353
	Medium	1479	1437	1392	1344	1293	1240
	Low	1303	1258	1211	1161	1108	1054
FSM*X4200 FSU*X4200	High	1720	1668	1602	1521	1426	1316
	Medium	1576	1540	1488	1421	1338	1239
	Low	1388	1367	1330	1278	1209	1124
FEM*X4800	High	1805	1772	1739	1704	1669	1632
	Medium	1652	1617	1581	1543	1504	1463
	Low	1458	1418	1377	1335	1292	1248

(continued on next page)

AIRFLOW PERFORMANCE – CFM at a given Speed and Static reading (continued)

Model (* = 2 or 4)	Blower Speed	Measured Static Pressure, inlet to outlet (inches water column)					
		0.10	0.20	0.30	0.40	0.50	0.60
FSM*X4800 FSU*X4800	High	1902	1824	1743	1659	1571	1479
	Medium	1830	1763	1690	1611	1527	1436
	Low	1625	1584	1531	1465	1387	1296
FEM*X6000	High	2057	2024	1989	1954	1916	1878
	Medium	1799	1766	1731	1695	1658	1618
	Low	1667	1633	1596	1558	1517	1475
FSM*X6000 FSU*X6000	High	2128	2050	1965	1875	1778	1674
	Medium	1959	1898	1829	1750	1663	1566
	Low	1748	1709	1659	1598	1525	1442

NOTES:

1. Airflow based on dry coil at 230V with factory approved filter and electric heater (2 element heater for model sizes 1800 – 3600, 3 element heater for model sizes 4200 – 6000)
2. Not recommended for use above 0.60 inches water column external static pressure.
3. Shaded cells indicate airflow is greater than 450 CFM per ton.

STATIC PRESSURE DROP ACROSS FILTER (inches of water column)

Model Size	CFM								
	400	600	800	1000	1200	1400	1600	1800	2000
1800	.020	.044	.075	–	–	–	–	–	–
2400	–	.044	.075	.110	–	–	–	–	–
3000	–	–	.048	.072	.100	–	–	–	–
3500 & 3600	–	–	–	.072	.100	.130	–	–	–
4200	–	–	–	–	.070	.092	.120	–	–
4800	–	–	–	–	–	.092	.120	.152	–
6000	–	–	–	–	–	–	.120	.152	.187

STATIC PRESSURE CORRECTION FROM DRY TO WET COIL (inches of water column)

Airflow performance chart on pages 7–8 was developed using fan coils with DRY coils.
When taking a static reading across a WET coil, adjust the static pressure numbers on pages 7–8 by **adding** the values in this table (for a given CFM, wet coil will have greater static pressure drop than dry coil).

Model Size	CFM															
	500	600	700	800	900	1000	1100	1200	1300	1400	1500	1600	1700	1800	1900	2000
1800 (all)	.034	.049	.063	–	–	–	–	–	–	–	–	–	–	–	–	–
2400 (all)	.016	.027	.038	.049	.059	–	–	–	–	–	–	–	–	–	–	–
3000 (all)	–	–	–	.049	.059	.070	.080	–	–	–	–	–	–	–	–	–
3500 (FEM) 3600 (FSU)	–	–	–	–	–	.055	.064	.073	.081	–	–	–	–	–	–	–
3600 (FEM) 3600 (FSM)	–	–	–	–	–	.034	.042	.049	.056	–	–	–	–	–	–	–
4200 (all)	–	–	–	–	–	–	–	.049	.056	.063	.070	–	–	–	–	–
4800 (all)	–	–	–	–	–	–	–	–	–	.038	.043	.049	.054	.059	–	–
6000 (all)	–	–	–	–	–	–	–	–	–	–	–	.027	.031	.035	.039	.043

ACCESSORIES

Description	Part Number	Use with models	
		FSU models	FSM & FEM models
Disconnect Kit	EBAC01DSC	use with All Heaters 5 kW thru 10 kW	
Downflow Base Kit	EBAC01NCB	1800	1800
	EBAC02NCB	2400, 3000	2400, 3000
	EBAC03NCB	3600, 4200, 4800	3500, 3600, 4200, 4800
	EBAC04NCB	6000	6000
Downflow Conversion Kit – Slope Coil	EBAC01DFS	1800, 2400, 3000, 3600	1800, 2400, 3000, 3500
Downflow Conversion Kit – “A” Coil	EBAC02DFA	4200, 4800, 6000	3600, 4200, 4800, 6000
Single Point Wiring Kit	EBAC01SPK	only for use with 15 kW & 20 kW fused heaters	
Single Point Wiring Kit – Square D® Jumper Bar Assembly	AMFK20SPA or Square D® part # QOU14100JBAF	Only for use with EHK15AKB and EHK20AKB breaker heaters	
Permanent Filter Kit (box of 12)	EBAC01FKS	1800	1800
	EBAC01FKM	2400, 3000	2400, 3000
	EBAC01FKL	3600, 4200, 4800	3500, 3600, 4200, 4800
	EBAC01FKX	6000	6000
No Heat (Plug) Kit (box of 6)	EBAC01PLG	ALL	Factory Installed
PVC Condensate Trap Kit (box of 50)	EBAC01CTK	ALL	ALL
Horizontal Drainpan Kit – Slope Coil	EBAC01DPK	1800	Factory Installed
	EBAC02DPK	2400, 3000	
	EBAC03DPK	3600	
Horizontal Drainpan Kit – A–Coil	EBAC04DPK	4200	
	EBAC05DPK	4800	
	EBAC06DPK	6000	
Horizontal Gasket Kit	EBAC01GSK	ALL	ALL (required for horizontal right and downflow)

ELECTRIC HEATERS

Part Number	Description	Use with Model Sizes
EHK05AKN	5 kW, single phase, no internal circuit protection	ALL
EHK05AKB	5 kW, single phase, with circuit breakers	ALL
EHK07AKN	8 kW, single phase, no internal circuit protection	ALL
EHK07AKB	8 kW, single phase, with circuit breakers	ALL
EHK09AKCN	9 kW, supplied as single phase, field convertible to 3–phase, no internal circuit protection	3500, 3600, 4200, 4800, 6000
EHK10AKN	10 kW, single phase, no internal circuit protection	ALL
EHK10AKB	10 kW, single phase, with circuit breakers	ALL
EHK15AKF	15 kW, single phase, with fuses	2400, 3000, 3500, 3600, 4200, 4800, 6000
EHK15AKB	15 kW, single phase, with circuit breakers	2400, 3000, 3500, 3600, 4200, 4800, 6000
EHK15AHN	15 kW, 3–phase, no internal circuit protection	3500, 3600, 4200, 4800, 6000
EHK18AHN	18 kW, 3–phase, no internal circuit protection	4200, 4800, 6000
EHK20AKF	20 kW, single phase, with fuses	3000, 3500, 3600, 4200, 4800, 6000
EHK20AKB	20 kW, single phase, with circuit breakers	3000, 3500, 3600, 4200, 4800, 6000
EHK25AHCF	24 kW, supplied as 3–phase, field convertible to single phase, with fuses	4800, 6000
EHK30AHCF	30 kW, supplied as 3–phase, field convertible to single phase, with fuses	4800, 6000

MINIMUM CFM WHEN USING ELECTRIC HEAT (motor speed Low except as noted)

Model Size	Heater kW								
	5	8	9	10	15	18	20	24	30
1800	525*	525*	–	600☆	–	–	–	–	–
2400	700‡	700‡	–	700‡	775‡	–	–	–	–
3000	875	875	–	875	875	–	1060*	–	–
3500 & 3600	1050	970	970	970	920	–	1040	–	–
4200	–	1225	1225	1225	1225	1225	1225	–	–
4800	–	1400	1400	1400	1400	1400	1400	1400	1400
6000	–	1750	1750	1750	1750	1750	1750	1750	1750

☆ Indicates High speed (Black wire) for 2–speed motor.

* Indicates Medium speed (Blue wire) for 3–speed motor or High speed (Black wire) for 2–speed motor

‡ Indicates Medium speed (Blue wire) for 3–speed motor or Low speed (Red wire) for 2–speed motor

STATIC PRESSURE CORRECTION FOR ELECTRIC HEATERS (inches of water column)

Airflow performance chart on pages 7–8 was developed using fan coils with 10 kW electric heater (2 elements) in the 1800 – 3600 model sizes, and 15 kW electric heaters (3 elements) in the 4200 – 6000 model sizes.
When using a different number of heater elements, adjust the static pressure numbers on pages 7–8 by adding or subtracting the values in this table (for a given CFM, more electric heater elements create higher static pressure drop).

Model Size	Heater kW					
	No Heater	5	8 or 10	9 or 15	20	18, 24, or 30
	Number of Heat Elements					
	0	1	2	3	4	6
1800	+0.02	+0.01	0	–0.02	–0.04	–
2400	+0.02	+0.01	0	–0.02	–0.04	–
3000	+0.02	+0.01	0	–0.02	–0.04	–
3500 & 3600	+0.02	+0.01	0	–0.02	–0.04	–
4200	+0.04	–	+0.02	0	–0.02	–0.10
4800	+0.04	–	+0.02	0	–0.02	–0.10
6000	+0.04	–	+0.02	0	–0.02	–0.10

TABLE 3 – ELECTRIC HEATER ELECTRICAL DATA

Heater Model	Heater kW		Phase	Internal Circuit Protection	Heater Amps 208/230V			Branch Circuit 208/230V					
								Minimum Circuit Ampacity (MCA) ☆			Max Fuse/Ckt Bkr Amps (Max OverCurrent Protection)		
					Single Circuit	Dual Circuit		Single Circuit	Dual Circuit		Single Circuit	Dual Circuit	
	230V	208V				L1, L2	L3, L4		L1, L2	L3, L4		L1, L2	L3, L4
EHK05AKN*	5	3.8	1	None	18.1 / 20.0	–	–	26.0 / 28.4	–	–	30 / 30	–	–
EHK05AKN**	5	3.8	1	None	18.1 / 20.0	–	–	31.2 / 33.5	–	–	35 / 35	–	–
EHK05AKB*	5	3.8	1	Ckt Bkr	18.1 / 20.0	–	–	26.0 / 28.4	–	–	30 / 30	–	–
EHK05AKB**	5	3.8	1	Ckt Bkr	18.1 / 20.0	–	–	31.2 / 33.5	–	–	35 / 35	–	–
EHK07AKN	8	6.0	1	None	28.9 / 32.0	–	–	44.7 / 48.5	–	–	45 / 50	–	–
EHK07AKB	8	6.0	1	Ckt Bkr	28.9 / 32.0	–	–	44.7 / 48.5	–	–	45 / 50	–	–
EHK09AKCN†	9	6.8	1	None	32.8 / 36.0	–	–	49.5 / 53.5	–	–	50 / 60	–	–
			3	None	18.8 / 20.8	–	–	32.0 / 34.5	–	–	35 / 35	–	–
EHK10AKN	10	7.5	1	None	36.2 / 40.0	–	–	53.8 / 58.5	–	–	60 / 60	–	–
EHK10AKB	10	7.5	1	Ckt Bkr	36.2 / 40.0	–	–	53.8 / 58.5	–	–	60 / 60	–	–
EHK15AKF	15	11.3	1	Fuse	54.2 / 59.9	36.2 / 40.0	18.1 / 20.0	76.3 / 83.4	53.8 / 58.5	22.7 / 25.0	80 / 90	60 / 60	25 / 25
EHK15AKB	15	11.3	1	Ckt Bkr	–	36.2 / 40.0	18.1 / 20.0	–	53.8 / 58.5	22.7 / 25.0	–	60 / 60	25 / 25
EHK15AHN	15	11.3	3	None	31.3 / 34.6	–	–	47.7 / 51.8	–	–	50 / 60	–	–
EHK18AHN	18	13.5	3	None	37.6 / 41.5	–	–	55.5 / 60.4	–	–	60 / 70	–	–
EHK20AKF	20	15.0	1	Fuse	72.3 / 79.9	36.2 / 40.0	36.2 / 40.0	98.9 / 108.4	53.8 / 58.5	45.3 / 50.0	100 / 110	60 / 60	50 / 50
EHK20AKB	20	15.0	1	Ckt Bkr	–	36.2 / 40.0	36.2 / 40.0	–	53.8 / 58.5	45.3 / 50.0	–	60 / 60	50 / 50
EHK25AHCF‡	24	18.0	3	Fuse	50.1 / 55.4	–	–	71.2 / 77.8	–	–	80 / 80	–	–
			1	Fuse	86.7 / 95.5	–	–	116.9 / 127.9	–	–	125 / 150	–	–
EHK30AHCF‡	30	22.5	3	Fuse	62.6 / 69.2	–	–	86.8 / 95.0	–	–	90 / 100	–	–
			1	Fuse	109 /120	–	–	144.8 / 158.5	–	–	150 / 175	–	–

TABLE 4 – FIELD MULTIPOINT WIRING OR 24 AND 30 KW SINGLE PHASE

Heater Model	Heater kW		PHASE	Heater Amps 208/230V			Minimum Circuit Ampacity 208/230V ☆			Minimum Wire Size (AWG) 208/230V‡			Min Gnd Wire Size 208/230V	Max Fuse/Ckt Bkr Amps 208/230V			Max Wire Length 208/230V (FT)‡‡		
	230V	208V		L1, L2	L3, L4	L5, L6	L1, L2	L3, L4	L5, L6	L1, L2	L3, L4	L5, L6		L1, L2	L3, L4	L5, L6	L1, L2	L3, L4	L5, L6
EHK25AHCF‡	24	18.0	1	28.9/32.0	28.9/32.0	28.9/32.0	44.7/48.5	36.2/40.0	36.2/40.0	8/8	8/8	8/8	10/10	45/50	40/40	40/40	59/60	73/73	73/73
EHK30AHCF‡	30	22.5	1	36.2/40.0	36.2/40.0	36.2/40.0	53.8/58.5	45.3/50.0	45.3/50.0	6/6	8/8	8/8	10/10	60/60	50/50	50/50	78/80	59/59	59/59

Notes:

* When used with Fan Coil model sizes 2400, 3600

** When used with Fan Coil model sizes 4200, 4800, 6000

☆ Includes blower motor amps of largest Fan Coil used with heater

† Supplied as single phase, field convertible to 3–phase

‡ Supplied as 3–phase, field convertible to single phase, single or multiple supply circuits

‡‡ Length shown is as measured one way along wire path between unit and service panel for a voltage drop not to exceed 2%

FAN COIL MODEL NUMBER IDENTIFICATION GUIDE

F	S	U	2	X	1800	A	1

F = Fan Coil

S = Standard PSC
E = GE X–13
MOTOR TYPE

U = Upflow
M = Multiposition
INSTALLATION TYPE

2 = R–22
4 = Environmentally Sound R–410A
REFRIGERANT

X = TXV
METERING DEVICE

1800 = 18,000 BTUH = 1½ tons
2400 = 24,000 BTUH = 2 tons
3000 = 30,000 BTUH = 2½ tons
3500 & 3600 = 36,000 BTUH = 3 tons
4200 = 42,000 BTUH = 3½ tons
4800 = 48,000 BTUH = 4 tons
6000 = 60,000 BTUH = 5 tons
NOMINAL CAPACITY

Sales Code

Engineering Revision

ACCESSORIES PART NUMBER IDENTIFICATION GUIDE

EB	AC	01	NCB	A

EB = Evaporator Blower

AC = Accessory

01 = Product Identifier Number

NCB = Non–Combustible Base Kit
DFK = Down Flow Kit
PLG = Power Plug (no heat kit)
SPK = Single Point Wiring Kit
FKS = Filter Kit Small
FKM = Filter Kit Medium
FKL = Filter Kit Large
FKX = Filter Kit Extra Large
CTK = Condensate Trap Kit (PVC pipe)

Sales Code

ELECTRIC HEATER MODEL NUMBER IDENTIFICATION GUIDE

EHK	05	A	K	N	1

EHK = Electric Heater Kit

05 = 5 kW
07 = 7 kW
09 = 9 kW
10 = 10 kW
15 = 15 kW
18 = 18 kW
20 = 20 kW
25 = 25 kW
30 = 30 kW
NOMINAL HEAT VALUE

Sales Code

K = 208 / 230 single–phase
H = 208 / 230, 3–phase
KC = 208 / 230, supplied as single phase, field convertible to 3–phase
HC = 208 / 230 supplied as 3–phase, field convertible to single phase
VOLTAGE (60 Hz)

Product Identifier

Engineering Code