TEMPSTAR®
Heating and Cooling Products

HWC
Product Specifications

HOT WATER COILS
30,000 to 100,000 Heating Capacity

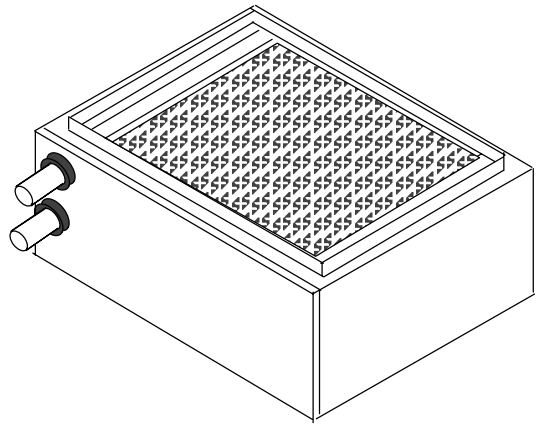

Representative Drawing only, some models may vary in appearance.

FEATURES

- Copper Tube / Aluminum Fin Coil
- 22 Gauge cabinet
- Sweat Connections
- Optional Circulating Pump can supply either port
- Fully Insulated Cabinet
- Consistent 9 inch height for applications with limited space
- Upflow/Downflow and Horizontal Applications Fits flush on FC series & modular blowers (back / sides)
- Simple mounting to air handler

OPTIONAL CIRCULATING PUMP

- Bronze Casing
- Non-Metallic Impeller
- Ceramic Shaft with Carbon Seal
- High Efficiency, Quiet, Permanent Split Capacitor Motor .52 Amp
- Easily Servicable, Replaceable Cartridge Design

LIMITED PARTS 5 YEAR WARRANTY

Model Number	Operating Dimensions height x depth x width (in)	Shipping Weight (lbs)
HWC1500	9 x 18 x 16⅜	20
HWC1900	9 x 18 x 19⅞	22
HWC2200	9 x 18 x 23½	25

Specifications subject to change without notice.

HEATING CAPACITY - HWC 1500

EWT (°F)	GPM		CFM											
			800				900				1000			
			AIR ENTERING TEMPERATURE EDB (°F)											
			60	65	70	75	60	65	70	75	60	65	70	75
140	3.0	TC	28.88	27.12	25.35	23.57	30.26	28.42	26.57	24.71	31.48	29.57	27.65	25.72
		LDB	93.1	96.1	99.1	102.1	90.8	94.0	97.1	100.3	88.8	92.1	95.4	98.7
		LWT	120.4	121.6	122.8	124.0	119.5	120.8	122.0	123.3	118.7	120.0	121.3	122.6
	4.0	TC	31.50	29.57	27.63	25.68	33.18	31.15	29.11	27.06	34.68	32.56	30.43	28.29
		LDB	96.1	98.9	101.7	104.6	93.8	96.7	99.7	102.7	91.8	94.9	98.0	101.1
		LWT	124.0	125.0	126.0	127.0	123.1	124.2	125.2	126.3	122.4	123.5	124.5	125.6
	5.0	TC	33.33	31.28	29.22	27.16	35.24	33.07	30.90	28.72	36.95	34.68	32.41	30.13
		LDB	98.2	100.9	103.6	106.3	95.8	98.7	101.6	104.4	93.8	96.8	99.8	102.7
		LWT	126.5	127.3	128.1	129.0	125.7	126.6	127.4	128.3	125.0	125.9	126.8	127.8
	6.0	TC	34.69	32.55	30.40	28.25	36.78	34.51	32.24	29.96	38.66	36.28	33.89	31.50
		LDB	99.7	102.3	104.9	107.5	97.4	100.2	102.9	105.7	95.4	98.3	101.2	104.0
		LWT	128.3	129.0	129.7	130.4	127.5	128.3	129.1	129.9	126.9	127.7	128.5	129.3
160	3.0	TC	36.69	34.90	33.11	31.31	38.47	36.60	34.73	32.84	40.04	38.10	36.15	34.20
		LDB	102.0	105.0	108.0	111.0	99.1	102.3	105.5	108.6	96.7	100.0	103.2	106.5
		LWT	135.0	136.2	137.5	138.7	133.8	135.1	136.4	137.6	132.7	134.1	135.4	136.7
	4.0	TC	39.95	37.99	36.03	34.06	42.11	40.05	37.98	35.91	44.03	41.88	39.73	37.57
		LDB	105.7	108.6	111.4	114.2	102.8	105.8	108.8	111.7	100.3	103.4	106.5	109.6
		LWT	139.6	140.6	141.6	142.6	138.5	139.6	140.6	141.7	137.5	138.6	139.7	140.8
	5.0	TC	42.22	40.14	38.06	35.97	44.66	42.47	40.27	38.07	46.86	44.56	42.26	39.95
		LDB	108.3	111.0	113.7	116.4	105.4	108.3	111.1	113.9	102.9	105.9	108.8	111.8
		LWT	142.8	143.6	144.5	145.3	141.8	142.7	143.6	144.5	140.9	141.8	142.7	143.7
	6.0	TC	43.89	41.72	39.55	37.38	46.56	44.27	41.97	39.67	48.97	46.56	44.15	41.73
		LDB	110.2	112.8	115.4	118.0	107.4	110.1	112.9	115.6	104.8	107.7	110.6	113.4
		LWT	145.1	145.8	146.5	147.3	144.2	144.9	145.7	146.5	143.3	144.2	145.0	145.8
180	3.0	TC	44.63	42.82	41.01	39.19	46.82	44.93	43.03	41.13	48.75	46.79	44.82	42.85
		LDB	111.1	114.1	117.1	120.1	107.6	110.8	113.9	117.1	104.6	107.9	111.2	114.5
		LWT	149.4	150.7	151.9	153.2	147.9	149.2	150.5	151.8	146.6	148.0	149.3	150.7
	4.0	TC	48.53	46.55	44.56	42.58	51.18	49.09	47.01	44.92	53.54	51.37	49.19	47.01
		LDB	115.5	118.4	121.2	124.0	112.1	115.0	118.0	121.0	109.0	112.1	115.2	118.3
		LWT	155.1	156.1	157.1	158.2	153.7	154.8	155.9	156.9	152.5	153.6	154.8	155.9
	5.0	TC	51.23	49.13	47.02	44.92	54.22	52.00	49.78	47.56	56.91	54.59	52.27	49.94
		LDB	118.6	121.3	124.0	126.7	115.2	118.0	120.8	123.7	112.1	115.1	118.0	121.0
		LWT	159.0	159.8	160.7	161.6	157.7	158.7	159.6	160.5	156.6	157.6	158.5	159.5
	6.0	TC	53.21	51.02	48.83	46.64	56.47	54.16	51.84	49.52	59.42	56.99	54.56	52.12
		LDB	120.9	123.5	126.1	128.7	117.4	120.2	122.9	125.7	114.4	117.3	120.1	123.0
		LWT	161.8	162.5	163.3	164.0	160.7	161.5	162.3	163.1	159.7	160.5	161.3	162.2

TC = Total Capacity BTU/hr X 1000
LDB = Leaving Dry-Bulb (°F)
LWT = Leaving Water Temperature (°F)

Specifications subject to change without notice.

HEATING CAPACITY - HWC 1900

EWT (°F)	GPM		CFM											
			1200				1300				1400			
			AIR ENTERING TEMPERATURE EDB (°F)											
			60	65	70	75	60	65	70	75	60	65	70	75
140	3.0	TC	38.49	36.15	33.80	31.45	39.59	37.19	34.78	32.36	40.60	38.15	35.68	33.20
		LDB	89.4	92.6	95.9	99.1	87.9	91.2	94.6	97.9	86.6	90.0	93.4	96.8
		LWT	113.9	115.5	117.1	118.7	113.2	114.8	116.4	118.1	112.5	114.2	115.8	117.5
	4.0	TC	42.62	40.01	37.40	34.78	44.01	41.32	38.63	35.92	45.29	42.53	39.76	36.98
		LDB	92.5	95.6	98.6	101.7	91.0	94.2	97.3	100.4	89.6	92.9	96.1	99.3
		LWT	118.4	119.7	121.0	122.3	117.6	119.0	120.4	121.8	117.0	118.4	119.8	121.2
	5.0	TC	45.57	42.77	39.96	37.15	47.18	44.29	41.39	38.48	48.68	45.69	42.71	39.71
		LDB	94.8	97.7	100.6	103.5	93.2	96.3	99.3	102.3	91.8	94.9	98.0	101.1
		LWT	121.5	122.6	123.8	124.9	120.8	122.0	123.2	124.4	120.2	121.4	122.6	123.9
	6.0	TC	47.78	44.84	41.89	38.93	49.58	46.53	43.47	40.41	51.24	48.10	44.94	41.78
		LDB	96.5	99.3	102.1	104.9	94.9	97.8	100.7	103.6	93.5	96.5	99.5	102.5
		LWT	123.8	124.8	125.8	126.8	123.2	124.2	125.3	126.3	122.7	123.7	124.8	125.9
160	3.0	TC	48.84	46.48	44.11	41.72	50.26	47.84	45.40	42.95	51.56	49.07	46.58	44.07
		LDB	97.3	100.5	103.8	107.0	95.4	98.8	102.1	105.4	93.7	97.2	100.6	104.0
		LWT	126.7	128.4	130.0	131.6	125.8	127.4	129.1	130.8	124.9	126.6	128.3	130.0
	4.0	TC	54.02	51.39	48.74	46.09	55.80	53.09	50.36	47.63	57.44	54.65	51.85	49.04
		LDB	101.2	104.3	107.3	110.4	99.3	102.5	105.6	108.7	97.6	100.8	104.0	107.3
		LWT	132.4	133.8	135.1	136.5	131.5	132.9	134.3	135.7	130.7	132.1	133.5	135.0
	5.0	TC	57.70	54.87	52.03	49.19	59.76	56.84	53.91	50.97	61.68	58.66	55.64	52.61
		LDB	104.0	106.9	109.9	112.7	102.1	105.1	108.1	111.1	100.3	103.4	106.5	109.6
		LWT	136.4	137.6	138.7	139.9	135.6	136.8	138.0	139.2	134.8	136.0	137.3	138.5
	6.0	TC	60.45	57.47	54.50	51.51	62.74	59.66	56.57	53.48	64.87	61.69	58.50	55.31
		LDB	106.1	108.9	111.7	114.5	104.2	107.1	110.0	112.9	102.4	105.4	108.4	111.4
		LWT	139.4	140.4	141.5	142.5	138.6	139.7	140.7	141.8	137.9	139.0	140.1	141.2
180	3.0	TC	59.36	56.98	54.58	52.18	61.10	58.65	56.20	53.73	62.69	60.19	57.67	55.14
		LDB	105.3	108.6	111.8	115.0	103.0	106.4	109.7	113.1	101.0	104.4	107.9	111.3
		LWT	139.3	141.0	142.6	144.3	138.1	139.8	141.5	143.2	137.1	138.8	140.5	142.2
	4.0	TC	65.59	62.93	60.27	57.59	67.77	65.03	62.28	59.53	69.78	66.97	64.14	61.31
		LDB	110.0	113.1	116.2	119.2	107.7	110.9	114.0	117.2	105.6	108.9	112.1	115.3
		LWT	146.3	147.7	149.1	150.4	145.2	146.6	148.0	149.4	144.2	145.6	147.1	148.5
	5.0	TC	69.99	67.14	64.28	61.41	72.52	69.57	66.61	63.65	74.86	71.82	68.78	65.72
		LDB	113.4	116.3	119.2	122.1	111.1	114.1	117.1	120.1	109.0	112.1	115.1	118.2
		LWT	151.3	152.4	153.6	154.8	150.2	151.4	152.6	153.9	149.3	150.5	151.8	153.0
	6.0	TC	73.27	70.27	67.27	64.26	76.07	72.97	69.86	66.74	78.68	75.47	72.26	69.04
		LDB	115.9	118.7	121.5	124.3	113.6	116.5	119.4	122.3	111.5	114.5	117.4	120.4
		LWT	154.9	156.0	157.0	158.0	154.0	155.0	156.1	157.2	153.1	154.2	155.3	156.4

TC = Total Capacity BTU/hr X 1000
LDB = Leaving Dry-Bulb (°F)
LWT = Leaving Water Temperature (°F)

Specifications subject to change without notice.

HEATING CAPACITY - HWC 2200

EWT (°F)	GPM		CFM											
			1600				1800				2000			
			AIR ENTERING TEMPERATURE EDB (°F)											
			60	65	70	75	60	65	70	75	60	65	70	75
140	3.0	TC	47.02	44.18	41.32	38.45	48.81	45.87	42.91	39.94	50.37	47.34	44.29	41.23
		LDB	86.9	90.3	93.7	97.1	84.8	88.4	91.9	95.4	83.1	86.7	90.4	94.0
		LWT	108.2	110.1	112.0	114.0	106.9	108.9	110.9	113.0	105.9	107.9	110.0	112.1
	4.0	TC	52.74	49.52	46.30	43.06	55.06	51.72	48.36	44.98	57.10	53.64	50.17	46.67
		LDB	90.2	93.4	96.6	99.8	88.0	91.4	94.7	98.0	86.1	89.6	93.1	96.5
		LWT	113.2	114.8	116.5	118.1	112.0	113.7	115.4	117.2	111.0	112.8	114.5	116.3
	5.0	TC	56.88	53.40	49.90	46.40	59.64	56.00	52.34	48.68	62.09	58.30	54.51	50.69
		LDB	92.6	95.6	98.7	101.7	90.3	93.5	96.7	99.9	88.4	91.7	95.0	98.3
		LWT	116.9	118.3	119.7	121.1	115.8	117.2	118.7	120.2	114.8	116.3	117.9	119.4
	6.0	TC	60.03	56.34	52.64	48.94	63.15	59.28	55.39	51.50	65.93	61.90	57.85	53.79
		LDB	94.4	97.3	100.2	103.2	92.1	95.2	98.3	101.3	90.2	93.4	96.6	99.8
		LWT	119.7	120.9	122.2	123.4	118.6	119.9	121.2	122.6	117.7	119.0	120.4	121.8
160	3.0	TC	59.59	56.72	53.84	50.94	61.88	58.91	55.93	52.93	63.86	60.81	57.74	54.65
		LDB	94.1	97.5	100.9	104.3	91.5	95.0	98.6	102.1	89.2	92.9	96.5	100.2
		LWT	119.4	121.4	123.3	125.3	117.9	119.9	121.9	124.0	116.5	118.6	120.7	122.8
	4.0	TC	66.78	63.54	60.28	57.02	69.76	66.38	62.99	59.58	72.37	68.87	65.36	61.84
		LDB	98.2	101.4	104.6	107.8	95.5	98.8	102.2	105.5	93.1	96.6	100.0	103.5
		LWT	125.9	127.5	129.2	130.9	124.4	126.1	127.8	129.6	123.0	124.8	126.6	128.4
	5.0	TC	71.97	68.46	64.93	61.40	75.50	71.82	68.14	64.44	78.63	74.81	70.98	67.13
		LDB	101.2	104.3	107.3	110.3	98.4	101.6	104.8	108.0	96.0	99.3	102.6	105.9
		LWT	130.6	132.0	133.5	134.9	129.2	130.7	132.2	133.7	127.9	129.4	131.0	132.6
	6.0	TC	75.90	72.18	68.45	64.71	79.88	75.98	72.06	68.13	83.43	79.36	75.28	71.19
		LDB	103.4	106.4	109.3	112.2	100.6	103.7	106.8	109.9	98.2	101.4	104.6	107.8
		LWT	134.2	135.4	136.7	138.0	132.8	134.1	135.5	136.8	131.6	133.0	134.4	135.8
180	3.0	TC	72.33	69.44	66.54	63.63	75.13	72.14	69.14	66.12	77.56	74.48	71.39	68.29
		LDB	101.4	104.8	108.2	111.6	98.2	101.8	105.3	108.8	95.5	99.2	102.8	106.4
		LWT	130.4	132.4	134.4	136.4	128.5	130.6	132.6	134.7	126.8	129.0	131.1	133.2
	4.0	TC	81.02	77.75	74.47	71.18	84.65	81.25	77.83	74.40	87.84	84.32	80.79	77.24
		LDB	106.4	109.6	112.8	116.0	103.1	106.4	109.7	113.1	100.2	103.7	107.1	110.6
		LWT	138.4	140.1	141.7	143.4	136.5	138.3	140.0	141.8	134.9	136.7	138.5	140.3
	5.0	TC	87.26	83.72	80.17	76.61	91.57	87.86	84.15	80.42	95.39	91.54	87.68	83.81
		LDB	109.9	113.0	116.1	119.1	106.6	109.8	113.0	116.1	103.7	107.0	110.3	113.6
		LWT	144.1	145.6	147.1	148.5	142.4	143.9	145.4	147.0	140.8	142.4	144.0	145.6
	6.0	TC	91.97	88.22	84.46	80.70	96.83	92.89	88.95	84.99	101.16	97.06	92.95	88.83
		LDB	112.6	115.6	118.5	121.4	109.3	112.3	115.4	118.5	106.3	109.5	112.7	115.9
		LWT	148.5	149.8	151.1	152.4	146.9	148.2	149.6	150.9	145.4	146.8	148.2	149.6

TC = Total Capacity BTU/hr X 1000
LDB = Leaving Dry-Bulb (°F)
LWT = Leaving Water Temperature (°F)

AIR PRESSURE DROP		
MODEL	CFM	PD (inches water column)
HWC1500	600	0.20
	800	0.31
HWC1900	1000	0.28
	1200	0.37
HWC2200	1600	0.38
	1800	0.47

WATER PRESSURE DROP		
MODEL	GPM	PD (feet water column)
HWC1500	3	1.4
	4	2.5
	5	3.9
	6	5.5
HWC1900	3	1.5
	4	2.6
	5	4.0
	6	5.7
HWC2200	3	1.5
	4	2.7
	5	4.2
	6	5.9

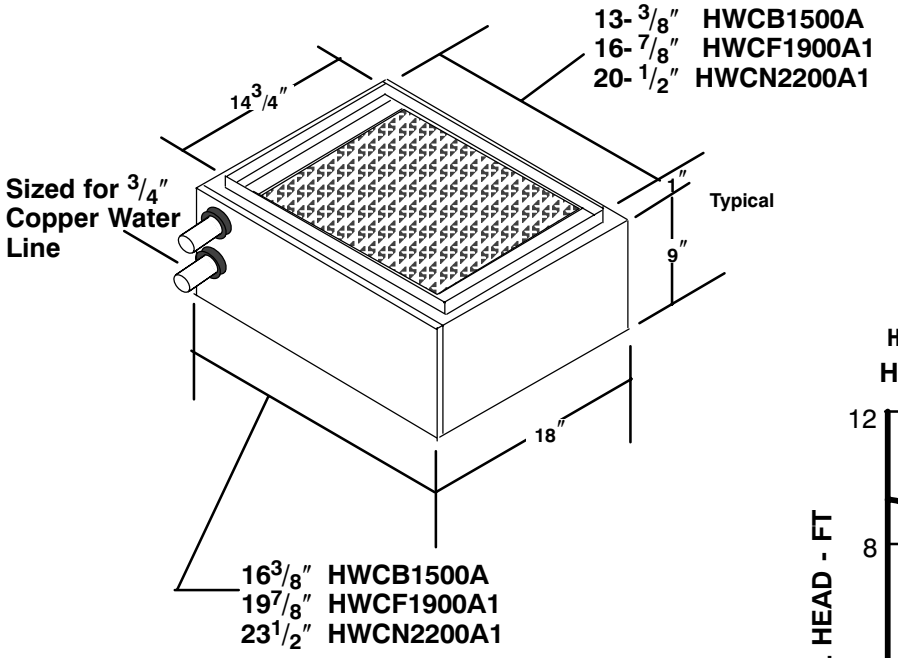

HWP0115A1 Accessory Pump, 115V .52 Amp.

HWP0115A1 PUMP PERFORMANCE

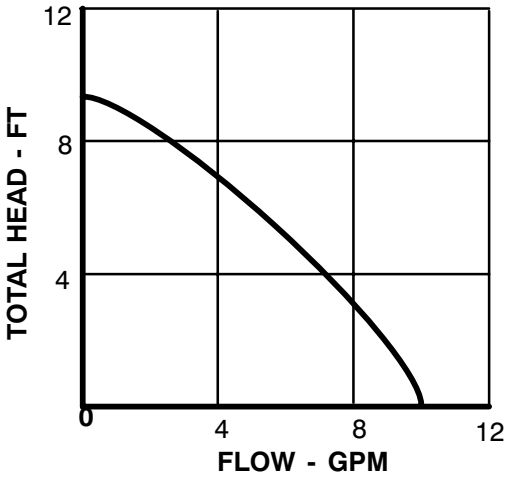

Specifications subject to change without notice.