TEMPSTAR®
Heating and Cooling Products

BHH
Product Specifications

HORIZONTAL BELT DRIVE DIRECT EXPANSION BLOWER COIL UNITS

ALL MODELS

- 3, 4, and 5 Ton
- 208/230–3–60 and 460–3–60 supply voltage
- Units are ETL listed to U.S. and Canadian safety standards
- External cabinets are fabricated of heavy gauge galvanealed steel, coated with gray baked powder enamel coating before assembly
- Standard with R22 thermal expansion valve mounted – with side port distributors
- Internal parts are built from G90 galvanized steel
- Coils are constructed of copper tube–aluminum fin material
- Drian pans are double sloped for positive drainage and are plastic or optional type 304 stainless steel
- Field installed accessory electric heater packages from 5 to 21 kW
- Fully insulated with 1”, 1–1/2 pound dual density IAQ insulation

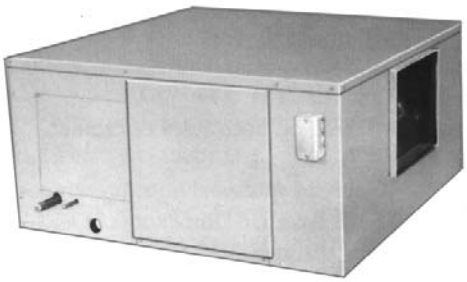

PERFORMANCE TESTING

- Run–tested at the factory prior to shipment
- 500 hour salt spray test per ASTM B–117

EASY TO INSTALL AND SERVICE

- 1/2 inch knock–outs in each corner of top panel for easy suspension
- DWDI fans with solid shafts and permanently lubricated ball bearings
- Motors are 208/230/460 volt and have overload protection. Motor pulleys are variable pitch single groove
- Service access panel on each side of the unit is easily removed for access to motor, blowers, and sheaves
- Air filters are standard, two inch throw–away filters, with access from either side

WARRANTY

- 1 year parts limited warranty

Models	Tons	CFM RANGE		Dimensions H x W x D	Filter Size (Qty.)	Ship Wt.
		Low	High			
BHH036M*A	3	900	1500	18 x 38 x 36$^1/_2$	16 x 32 (1)	178
BHH048M*A	4	1200	2000	22 x 42 x 45	20 x 20 (2)	210
BHH060M*A	5	1500	2500	22 x 42 x 45	20 x 20 (2)	246

* = Drive Option

Specifications subject to change without notice.

SPECIFICATIONS

MODEL		BHH036M3A		BHH036M4A		BHH048M4A		BHH048M5A		BHH060M5A		BHH060M6A	
Application		Horizontal											
Electrical Data	Voltage	208/230	460	208/230	460	208/230	460	208/230	460	208/230	460	208/230	460
	Phase/Hz	3/60											
	Min. Circuit Ampacity	3.0	1.4	4.4	2.0	4.4	2.0	5.8	2.6	5.8	2.6	8.3	3.8
	Max. Fuse	15											
	Contactor	Field Supplied											
Blower Data	Size	9-6R				12-6R				12-9R			
	Horsepower	1/2		3/4		3/4		1		1		1-1/2	
	FLA/MCA	2.2/20.0	1.0/10.0	3.0/25.0	1.6/12.5	3.2/25.0	1.6/12.5	4.2/30.0	2.1/15.0	4.2/30.0	2.1/15.0	5.6/40.0	3.0/20.0
Refrigerant Connection	Liquid (O.D.)	3/8"				1/2"				1/2"			
	Suction (O.D.)	3/4"				7/8"				1-1/8"			
Condensate Drain		PVC stub or 3/4" FPT drain											
Filters (Qty.)		16" x 32" (1)				20" x 20" (2)				20" x 20" (2)			
Shipping Weight (lbs.)		178				210				246			

FAN PERFORMANCE

BHH036 TOTAL STATIC PRESSURE (in wc)

CFM	0.20		0.30		0.40		0.50		0.60		0.70		0.80		0.90		1.00		1.10	
	RPM	BHP	RPM	BHP	RPM	BHP	RPM	BHP	RPM	BHP	RPM	BHP	RPM	BHP	RPM	BHP	RPM	BHP	RPM	BHP
900	749	0.14	814	0.16	876	0.19	934	0.21	989	0.23	1040	0.25	1089	0.27	1136	0.29	1182	0.30	1226	0.32
950	776	0.16	839	0.18	899	0.21	955	0.23	1009	0.26	1059	0.28	1107	0.30	1154	0.32	1198	0.34	1242	0.36
960	782	0.16	844	0.19	903	0.21	960	0.24	1013	0.26	1063	0.29	1111	0.31	1157	0.33	1202	0.35	1245	0.36
1000	804	0.18	864	0.20	922	0.23	977	0.26	1029	0.29	1079	0.31	1126	0.34	1172	0.36	1216	0.38	1258	0.39
1020	815	0.19	874	0.21	931	0.24	986	0.27	1038	0.30	1087	0.32	1134	0.35	1179	0.37	1223	0.39	1265	0.41
1080	850	0.22	905	0.24	960	0.27	1013	0.30	1063	0.33	1112	0.36	1158	0.39	1202	0.41	1245	0.44	1286	0.46
1140	885	0.26	938	0.28	990	0.31	1041	0.34	1090	0.37	1137	0.40	1182	0.43	1226	0.46	1268	0.49	1308	0.51
1200	921	0.29	971	0.32	1021	0.34	1070	0.37	1117	0.41	1163	0.44	1208	0.47	1250	0.51	1291	0.54	1331	0.56
1260	958	0.34	1005	0.36	1052	0.39	1100	0.42	1146	0.45	1190	0.48	1234	0.52	1275	0.55	1316	0.59	1355	0.62
1320	995	0.38	1039	0.40	1085	0.43	1130	0.46	1175	0.50	1218	0.53	1260	0.57	1301	0.61	1341	0.64	1379	0.68
1380	1032	0.43	1074	0.45	1118	0.48	1161	0.51	1204	0.55	1247	0.58	1288	0.62	1328	0.66	1367	0.70	1405	0.74
1440	1070	0.49	1110	0.51	1152	0.54	1193	0.57	1235	0.60	1276	0.64	1316	0.68	1355	0.72	1393	0.76	1430	0.80
1500	1108	0.55	1146	0.57	1186	0.60	1226	0.63	1266	0.66	1306	0.70	1344	0.74	1383	0.78	1420	0.82	1456	0.86

BHH048 TOTAL STATIC PRESSURE (in wc)

CFM	.20		.50		.80		1.00		1.30		1.50		1.80		2.00		2.30		2.50	
	RPM	BHP	RPM	BHP	RPM	BHP	RPM	BHP	RPM	BHP	RPM	BHP	RPM	BHP	RPM	BHP	RPM	BHP	RPM	BHP
1200	545	0.16	688	0.24	810	0.32	884	0.38	987	0.46	1051	0.52	1143	0.62	1201	0.68	1284	0.78	1338	0.86
1280	569	0.19	705	0.27	824	0.3	896	0.42	996	0.51	1059	0.57	1149	0.66	1205	0.73	1287	0.83	1340	0.91
1360	592	0.22	723	0.30	838	0.40	909	0.46	1007	0.55	1068	0.62	1156	0.72	1212	0.79	1292	0.89	1343	0.96
1440	617	0.25	742	0.34	854	0.44	923	0.50	1019	0.61	1079	0.67	1164	0.78	1219	0.85	1298	0.95	1348	1.03
1520	641	0.29	761	0.38	870	0.48	934	0.55	1031	0.66	1090	0.73	1174	0.84	1228	0.91	1305	1.02	1354	1.10
1600	667	0.33	782	0.43	887	0.53	953	0.61	1045	0.72	1102	0.79	1185	0.90	1237	0.98	1313	1.10	1362	1.17
1680	692	0.37	803	0.48	905	0.59	969	0.66	1059	0.78	1116	0.86	1196	0.97	1248	1.05	1322	1.17	1370	1.25
1760	718	0.42	824	0.53	924	0.64	986	0.72	1074	0.84	1129	0.92	1209	1.05	1260	1.13	1333	1.25	1380	1.34
1840	745	0.48	846	0.59	943	0.71	1003	0.79	1089	0.91	1144	1.00	1222	1.12	1272	1.21	1344	1.34	1390	1.43
1920	771	0.54	869	0.65	962	0.77	1021	0.86	1106	0.99	1159	1.07	1236	1.21	1285	1.30	1355	1.43	---	---
2000	798	0.60	892	0.72	982	0.84	1040	0.93	1123	1.06	1175	1.15	1250	1.29	1298	1.38	---	---	---	---

BHH060 TOTAL STATIC PRESSURE (in wc)

CFM	.20		.50		.80		1.00		1.30		1.50		1.80		2.00		2.30		2.50	
	RPM	BHP	RPM	BHP	RPM	BHP	RPM	BHP	RPM	BHP	RPM	BHP	RPM	BHP	RPM	BHP	RPM	BHP	RPM	BHP
1500	484	0.16	631	0.25	752	0.34	831	0.41	961	0.50	1077	0.56	---	---	---	---	---	---	---	---
1600	501	0.19	644	0.28	762	0.38	836	0.45	949	0.55	1035	0.62	1228	0.68	---	---	---	---	---	---
1700	519	0.22	658	0.32	773	0.42	843	0.49	948	0.60	1021	0.67	1149	0.78	1274	0.82	---	---	---	---
1800	538	0.25	673	0.36	785	0.46	853	0.54	951	0.65	1018	0.73	1125	0.84	1209	0.91	1407	0.96	---	---
1900	557	0.29	688	0.40	798	0.51	864	0.59	958	0.71	1020	0.79	1116	0.91	1186	0.99	1312	1.10	1425	1.14
2000	576	0.32	703	0.44	811	0.56	876	0.64	967	0.76	1026	0.85	1115	0.98	1177	1.06	1306	1.22	1356	1.27
2100	596	0.37	719	0.49	825	0.61	889	0.70	977	0.83	1034	0.91	1118	1.05	1175	1.14	1300	1.32	1329	1.36
2200	617	0.41	736	0.54	840	0.67	902	0.76	989	0.89	1044	0.98	1125	1.12	1178	1.22	1294	1.41	1318	1.45
2300	637	0.47	752	0.60	855	0.73	916	0.83	1001	0.96	1055	1.06	1133	1.20	1184	1.30	1288	1.49	1314	1.54
2400	658	0.52	769	0.66	870	0.80	930	0.90	1014	1.04	1067	1.14	1143	1.28	1192	1.38	1282	1.57	1315	1.64
2500	679	0.58	787	0.73	885	0.87	945	0.97	1028	1.12	1079	1.22	1153	1.37	1201	1.47	1276	1.64	1319	1.74

Specifications subject to change without notice.

DIRECT EXPANSION COOLING CAPACITIES

SCT (F)	SET(F)		BHH036 CFM @ 80 F EDB								
			900			1200			1500		
			AIR ENTERING TEMPERATURE EWS (F)								
			62	67	72	62	67	72	62	67	72
85	40	TC	29.97	39.05	49.22	35.23	45.53	57.21	39.59	50.39	63.45
		SHC	26.84	25.19	23.32	32.37	30.20	27.41	37.87	34.52	30.80
		LDB	52.7	54.5	56.5	55.1	57.1	59.3	56.9	59.1	61.4
		LWB	50.1	52.7	55.6	51.6	54.8	58.0	52.7	56.3	59.8
		PD	1.37	2.27	3.51	1.88	3.07	4.72	2.35	3.80	5.78
		BF	0.16	0.17	00.00	0.21	0.21	0.27	0.25	0.25	0.29
	45	TC	23.97	32.20	42.09	29.02	37.48	48.93	33.54	41.67	54.29
		SHC	23.73	22.30	20.46	29.02	26.89	24.21	33.54	30.88	27.6
		LDB	55.91	57.45	59.40	57.91	59.61	61.73	59.57	61.28	63.49
		LWB	52.66	55.55	58.35	53.59	57.15	60.33	54.27	58.33	61.79
		PD	0.81	1.43	2.37	1.16	1.93	3.19	1.54	2.37	3.92
		BF	0.19	0.17	0.20	0.25	0.21	0.24	0.31	0.25	0.27
	50	TC	19.96	24.76	34.83	24.50	28.78	40.09	28.37	32.01	44.50
		SHC	19.96	19.32	17.60	24.50	23.46	20.97	28.37	27.12	23.84
		LDB	59.7	60.5	62.3	61.4	62.2	64.2	62.7	63.6	65.6
		LWB	54.3	58.4	61.1	55.0	59.6	62.7	55.5	60.5	63.8
		PD	0.54	0.81	1.49	0.78	1.07	1.99	1.03	1.32	2.44
		BF	0.32	0.17	0.19	0.37	0.21	0.23	0.42	0.25	0.26
95	40	TC	29.99	39.03	49.18	35.23	45.47	57.07	39.56	50.57	63.23
		SHC	26.85	25.19	23.30	32.67	30.18	27.35	37.86	34.48	30.71
		LDB	52.7	54.5	56.5	55.1	57.1	59.3	56.9	59.1	61.5
		LWB	50.0	52.7	55.6	51.6	54.8	58.1	52.8	56.3	59.9
		PD	1.52	2.51	3.89	2.07	3.39	5.21	2.61	4.19	6.37
		BF	0.16	0.17	0.30	0.21	0.21	0.27	0.25	0.25	0.29
	45	TC	24.04	32.24	42.13	29.07	37.50	48.90	33.58	41.67	54.21
		SHC	23.80	22.32	20.48	29.07	26.90	24.20	33.58	30.89	27.33
		LDB	55.84	57.43	59.38	57.87	59.61	61.73	59.88	61.27	63.50
		LWB	52.63	55.53	58.34	53.57	57.14	60.34	54.26	58.33	61.80
		PD	0.90	1.58	2.62	1.29	2.14	3.52	1.71	2.62	4.32
		BF	0.19	0.17	0.20	0.25	0.21	0.24	0.31	0.25	0.27
	50	TC	20.17	24.88	34.60	24.62	28.88	40.14	28.47	32.11	44.50
		SHC	20.17	19.38	17.63	24.62	23.51	20.99	28.47	27.17	23.85
		LDB	59.5	60.4	62.3	61.3	62.2	64.2	62.7	63.5	65.6
		LWB	54.3	58.4	61.1	55.0	59.6	62.6	55.5	60.4	63.8
		PD	0.59	0.89	1.65	0.86	1.18	2.20	1.14	1.45	2.70
		BF	0.31	0.47	0.19	0.37	0.21	0.23	0.41	0.25	0.26
105	40	TC	30.00	38.99	49.09	35.20	45.36	56.88	39.51	50.40	62.93
		SHC	26.86	25.17	23.26	32.66	30.13	27.28	37.84	34.41	30.60
		LDB	52.7	54.5	56.6	55.1	57.1	59.4	56.9	59.1	61.5
		LWB	50.0	52.8	55.6	51.6	54.8	58.1	52.8	56.3	59.9
		PD	1.69	2.79	4.31	2.32	3.78	5.77	2.90	4.64	7.03
		BF	0.16	0.17	0.30	0.21	0.21	0.27	0.25	0.25	0.29
	45	TC	24.08	32.26	42.12	29.09	37.49	48.82	33.59	41.63	54.06
		SHC	23.83	22.33	20.48	29.09	26.90	24.18	33.59	30.87	27.29
		LDB	55.81	57.43	59.38	57.85	59.61	61.75	59.54	61.28	63.53
		LWB	52.61	55.52	58.34	53.87	57.15	60.36	54.26	58.34	61.84
		PD	1.00	1.76	2.93	1.44	2.38	3.92	1.91	2.92	4.79
		BF	0.19	0.17	0.50	0.25	0.21	0.24	0.31	0.25	0.27
	50	TC	20.24	24.93	34.64	24.69	28.93	40.14	28.52	32.20	44.48
		SHC	20.24	19.40	17.65	24.69	23.53	20.99	28.52	27.21	23.84
		LDB	59.5	60.4	62.2	61.2	62.2	64.20	62.6	63.5	65.6
		LWB	54.2	58.4	61.1	54.9	59.6	62.6	55.5	60.4	63.8
		PD	0.66	0.98	1.84	0.96	1.32	2.45	1.27	1.63	2.99
		BF	0.31	0.17	0.19	0.37	0.21	0.23	0.41	0.25	0.26

Specifications subject to change without notice.

DIRECT EXPANSION COOLING CAPACITIES CONT.

SCT (F)	SET(F)		BHH048 CFM @ 80 F EDB								
			1200			1600			2000		
			AIR ENTERING TEMPERATURE EWS (F)								
			62	67	72	62	67	72	62	67	72
85	40	TC	39.32	50.83	63.64	45.77	58.52	72.87	51.11	64.44	79.84
		SHC	35.60	33.09	30.25	43.17	39.41	35.18	49.94	44.81	39.23
		LDB	52.9	54.9	57.2	55.4	57.6	60.1	57.2	59.6	62.2
		LWB	50.3	53.2	56.2	51.9	55.3	58.8	53.1	56.8	60.6
		PD	2.87	4.66	7.05	3.85	6.15	9.17	4.77	7.40	10.90
		BF	0.16	0.17	0.26	0.21	0.21	0.26	0.24	0.25	0.28
	45	TC	31.95	42.41	55.07	38.55	48.89	63.23	44.32	53.91	69.44
		SHC	31.73	29.57	26.88	38.55	35.50	31.55	44.32	40.63	35.43
		LDB	55.89	57.62	59.74	58.01	59.85	62.17	59.77	61.54	63.98
		LWB	52.68	55.73	58.68	53.63	57.39	60.75	54.35	58.61	62.26
		PD	1.74	3.01	4.91	2.50	3.98	6.42	3.29	4.82	7.70
		BF	0.19	0.17	0.20	0.26	0.21	0.23	0.32	0.24	0.26
	50	TC	27.01	33.07	45.69	32.85	38.15	52.53	37.84	42.16	57.83
		SHC	27.01	25.87	23.38	32.85	31.32	27.67	37.84	36.11	31.32
		LDB	59.5	60.4	62.4	61.3	62.20	64.4	62.7	63.3	65.8
		LWB	54.2	58.4	61.2	55.0	59.7	62.8	55.5	60.5	64.0
		PD	1.16	1.72	3.15	1.69	2.27	4.13	2.22	2.77	4.99
		BF	0.31	0.17	0.19	0.37	0.21	0.23	0.42	0.25	0.26
95	40	TC	39.23	50.62	63.32	45.61	58.17	72.33	50.89	63.97	79.11
		SHC	35.57	33.01	30.12	43.11	39.27	34.97	49.85	44.63	38.96
		LDB	53.0	55.0	57.3	55.4	57.7	60.2	57.2	59.7	62.4
		LWB	50.3	53.2	56.3	52.0	55.4	58.9	53.1	56.9	60.7
		PD	3.18	5.14	7.76	4.26	6.75	10.01	5.26	8.10	11.88
		BF	0.16	0.17	0.26	0.21	0.21	0.26	0.24	0.24	0.25
	45	TC	31.97	42.33	54.92	38.53	48.72	62.91	44.27	53.65	68.96
		SHC	31.75	29.54	26.83	38.53	35.43	31.43	44.27	40.53	35.27
		LDB	55.88	57.64	59.79	58.02	59.88	62.23	59.79	61.59	64.05
		LWB	52.68	55.75	58.72	53.64	57.43	60.82	54.36	58.66	62.33
		PD	1.92	3.33	5.41	2.78	4.39	7.06	3.64	5.31	8.42
		BF	0.19	0.17	0.20	0.26	0.21	0.23	0.32	0.24	0.26
	50	TC	27.09	33.11	45.59	32.89	38.13	52.36	37.87	42.10	57.58
		SHC	27.09	25.89	23.35	32.89	31.31	27.62	37.87	36.10	31.24
		LDB	59.4	60.4	62.4	61.2	62.2	64.4	62.7	63.6	65.9
		LWB	54.2	58.4	61.3	54.9	59.7	62.9	55.5	60.6	64.1
		PD	1.29	1.90	3.47	1.87	2.52	4.56	2.46	3.06	5.49
		BF	0.30	0.17	0.19	0.37	0.21	0.23	0.42	0.25	0.26
105	40	TC	39.11	50.36	62.91	45.38	57.75	71.69	50.62	63.39	78.27
		SHC	35.52	32.90	29.95	43.04	39.10	34.72	49.72	44040	38.65
		LDB	53.0	55.1	57.4	55.5	57.8	60.4	57.3	59.8	62.5
		LWB	50.4	53.3	56.4	52.0	55.4	59.0	53.2	57.0	60.9
		PD	3.53	5.69	8.55	4.71	7.42	10.98	5.81	8.88	12.95
		BF	0.16	0.17	0.25	0.21	0.21	0.26	0.24	0.24	0.28
	45	TC	31.95	42.21	54.70	38.49	48.49	62.50	44.16	53.32	68.39
		SHC	31.75	29.50	26.74	38.49	35.35	31.28	44.16	40.41	35.07
		LDB	55.88	57.68	59.85	58.05	59.93	62.32	59.84	61.64	64.14
		LWB	52.68	55.79	58.78	53.65	57.48	60.90	54.38	58.71	62.42
		PD	2.15	3.70	5.99	3.10	4.86	7.76	4.06	5.85	9.23
		BF	0.19	0.17	0.20	0.26	0.21	0.23	0.32	0.24	0.26
	50	TC	27.13	33.10	45.48	32.91	38.07	52.14	37.84	41.98	57.24
		SHC	27.13	25.89	23.31	32.91	31.30	27.55	37.84	36.06	31.14
		LDB	59.4	60.4	62.4	61.2	62.2	64.4	62.7	63.6	65.9
		LWB	54.2	58.4	61.3	54.9	59.7	62.9	55.5	60.6	64.1
		PD	1.43	2.12	3.86	2.09	2.80	5.05	2.75	3.39	6.05
		BF	0.30	0.17	0.19	0.37	0.21	0.22	0.42	0.24	0.26

Specifications subject to change without notice.

DIRECT EXPANSION COOLING CAPACITIES CONT.

SCT (F)	SET(F)		BHH060 CFM @ 80 F EDB								
			1500			2000			2500		
			AIR ENTERING TEMPERATURE EWS (F)								
			62	67	72	62	67	72	62	67	72
85	40	TC	49.61	64.51	81.27	58.29	75.20	94.28	65.60	83.70	104.48
		SHC	44.51	41.72	38.55	54.15	50.01	45.26	62.78	57.15	50.84
		LDB	52.9	54.7	56.7	55.3	57.3	59.5	57.1	59.2	61.6
		LWB	50.2	52.9	55.8	51.7	54.9	58.3	52.8	56.4	60.0
		PD	1.30	2.14	3.31	1.78	2.89	4.42	2.22	3.57	5.41
		BF	0.17	0.18	0.27	0.22	0.22	0.27	0.25	0.25	0.29
	45	TC	39.52	53.18	69.46	48.00	61.90	80.51	55.49	68.83	89.26
		SHC	39.21	36.93	33.83	48.00	44.54	39.96	55.49	51.16	45.13
		LDB	56.16	57.64	59.60	58.12	59.78	61.94	59.76	61.43	63.69
		LWB	52.79	55.69	58.54	53.67	57.27	60.52	54.34	58.43	61.96
		PD	0.77	1.35	2.25	1.11	1.82	2.99	1.47	2.24	3.66
		BF	0.20	0.17	0.20	0.26	0.21	0.24	0.32	0.25	0.27
	50	TC	32.40	40.65	56.86	40.25	47.34	65.96	46.81	52.70	73.12
		SHC	32.40	31.87	29.7	40.25	38.76	34.61	46.81	44.81	39.33
		LDB	60.3	60.7	62.5	61.6	62.45	64.4	62.9	63.7	65.8
		LWB	54.6	58.6	61.3	55.1	59.7	62.8	55.6	60.6	63.9
		PD	0.52	0.77	1.42	0.75	1.02	1.88	0.99	1.25	2.29
		BF	0.33	0.18	0.19	0.38	0.22	0.23	0.42	0.26	0.26
95	40	TC	49.69	64.51	81.21	58.41	75.12	94.11	65.59	83.54	104.18
		SHC	44.56	41.73	38.53	54.22	49.98	45.19	52.79	57.10	50.73
		LDB	52.9	54.7	56.8	55.3	57.3	59.6	57.1	59.3	61.7
		LWB	50.2	52.9	55.8	51.7	54.9	58.3	52.8	56.4	60.1
		PD	1.44	2.37	3.66	1.97	3.20	4.88	2.47	3.93	5.95
		BF	0.17	0.18	0.27	0.22	0.22	0.27	0.25	0.25	0.29
	45	TC	39.75	53.31	69.52	48.14	61.98	80.52	55.61	68.88	89.15
		SHC	39.42	37.00	33.86	48.14	44.58	39.97	55.61	51.18	45.10
		LDB	56.3	57.60	59.58	58.05	59.76	61.94	59.72	61.42	63.70
		LWB	52.73	55.66	58.52	53.65	57.25	60.52	54.33	58.42	61.97
		PD	0.85	1.50	2.48	1.23	2.02	3.31	1.63	2.48	4.05
		BF	0.20	0.17	0.20	0.26	0.21	0.24	0.31	0.25	0.27
	50	TC	33.10	41.0	57.07	40.65	47.59	66.09	47.06	52.92	73.22
		SHC	33.10	32.6	29.16	40.65	38.89	34.67	47.06	44.91	39.38
		LDB	59.9	60.6	62.4	61.5	62.4	64.3	62.8	63.7	65.8
		LWB	54.4	58.5	61.2	55.0	59.7	62.8	55.6	60.5	63.9
		PD	0.57	0.85	1.57	0.83	1.12	2.08	1.09	1.38	2.53
		BF	0.32	0.17	0.19	0.37	0.22	0.23	0.42	0.26	0.26
105	40	TC	49.72	64.45	81.08	58.38	74.95	93.82	65.52	83.28	103.74
		SHC	44.58	41.70	38.47	54.21	49.92	45.08	62.76	56.99	50.56
		LDB	52.9	54.7	56.8	55.3	57.3	59.6	57.1	59.3	61.7
		LWB	50.1	52.9	55.9	51.7	55.0	58.3	52.8	56.4	60.1
		PD	1.61	2.64	4.07	2.0	3.55	5.41	2.74	4.36	6.56
		BF	0.17	0.17	0.27	0.22	0.22	0.27	0.25	0.25	0.29
	45	TC	39.87	53.37	69.95	48.22	61.99	80.41	55.65	68.83	88.95
		SHC	39.54	37.03	33.86	48.22	44.59	39.94	55.65	51.17	45.04
		LDB	55.96	57.58	59.58	58.02	59.76	61.95	59.70	61.42	63.72
		LWB	52.70	55.64	58.52	53.63	57.25	60.54	54.32	58.43	62.00
		PD	0.96	1.67	2.76	1.37	2.24	3.7	1.81	2.75	4.48
		BF	0.19	0.17	0.20	0.26	0.21	0.24	0.31	0.25	0.27
	50	TC	33.46	41.19	57.18	40.84	47.73	66.13	47.19	53.05	73.20
		SHC	33.46	32.15	29.21	40.84	38.96	34.70	47.19	44.97	39.38
		LDB	59.7	60.5	62.4	61.4	62.3	64.3	62.8	63.7	65.8
		LWB	54.3	58.5	61.2	55.0	59.7	62.8	55.6	60.5	63.9
		PD	0.63	0.94	1.74	0.92	1.25	2.30	1.21	1.54	2.81
		BF	0.31	0.17	0.19	0.37	0.22	0.23	0.42	0.26	0.26

Specifications subject to change without notice.

HOT WATER HEATING CAPACITIES

AHW36						AHW48						AHW60					
GPM	PD FT.	CFM	TTL MBH	LAT F	LWT F	GPM	PD FT.	CFM	TTL MBH	LAT F	LWT F	GPM	PD FT.	CFM	TTL MBH	LAT F	LWT F
		900	49.0	110.3	146.6			1200	66.0	111.4	145.9			1500	86.0	112.9	150.7
3.0	1.10	1200	55.0	102.6	142.4	4.0	.080	1600	75.0	103.5	141.6	6.0	0.70	2000	97.0	105.0	146.8
		1500	60.0	97.1	139.0			2000	82.0	97.9	138.2			2500	106.0	99.4	143.7
		900	55.0	116.8	161.1			1200	75.0	118.4	160.6			1500	96.0	119.4	163.5
6.0	4.10	1200	63.5	109.1	158.3	8.0	3.00	1600	87.0	110.6	157.6	12.0	2.70	2000	111.0	111.6	160.9
		1500	70.0	103.5	155.9			2000	97.0	104.9	155.2			2500	124.0	105.9	158.8
		900	57.5	119.3	166.9			1200	79.0	121.2	166.4			1500	100.0	121.9	168.6
9.0	9.00	1200	67.0	111.7	164.7	12.0	6.70	1600	92.0	113.5	164.2	18.0	6.00	2000	117.0	114.2	166.6
		1500	75.0	106.2	162.9			2000	103.0	107.8	162.3			2500	131.0	108.6	165.1

HOT WATER HEATING CORRECTION FACTORS

ENTERING AIR TEMP (F)	ENTERING WATER TEMP (F)								
	100°	110°	120°	130°	140°	150°	160°	170°	180°
50°	.419	.500	.579	.665	.742	.838	.917	1.000	1.090
55°	.376	.460	.544	.629	.708	.791	.873	.963	1.048
60°	.335	.419	.500	.579	.665	.742	.838	.917	1.000
65°	.290	.376	.460	.544	.629	.708	.791	.873	.963
70°	.251	.335	.419	.500	.579	.665	.742	.838	.917
75°	.205	.290	.376	.460	.544	.629	.708	.791	.873
80°	.167	.251	.335	.419	.500	.579	.665	.742	.838

NOTE: When correction factors are used for various entering air and entering water temperatures, multiply the correction factor times the above listed capacity. The correction factors may be used with all published 180° EWT heating capacities.

DIMENSIONS

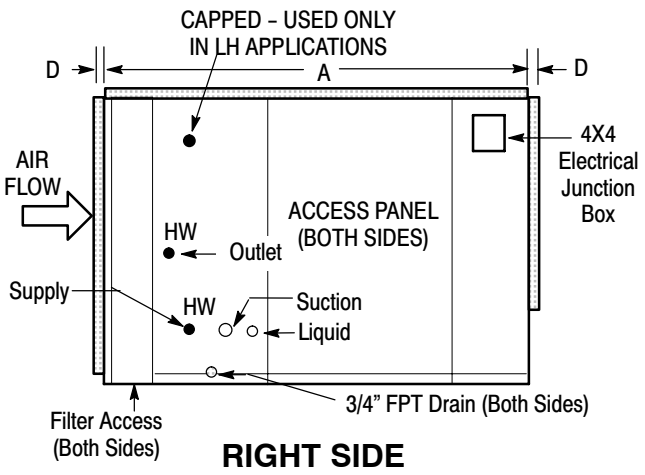

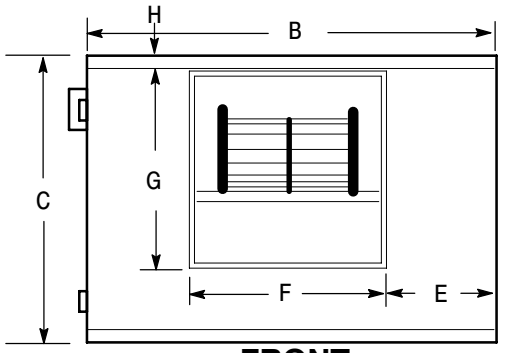

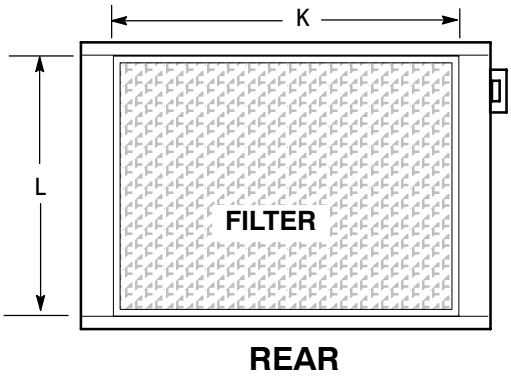

BHH DIMENSIONS

MODEL	UNIT						BLOWER OPENING OUTLET		RETURN DUCT CONNECTION	
	A	B	C	D	E	H	F	G	K	L
BHH036	37.1	36.6	18.1	1	14.1	1	8.4	10.6	27.6	16.4
BHH048	42.0	45.0	22.1	1	17.9	1	9.1	13.8	36.0	20.0
BHH060	42.0	45.0	22.1	1	14.3	1	12.5	13.8	36.0	20.0

Specifications subject to change without notice.

PRESSURE LOSS TABLE

MODEL	CFM	DX	Hot Water	FLAT FILTERS	ANGLED FILTERS	MIXING BOX	DISCHARGE PLENUM	
		Std Cap	2 ROW	STD T/A	STD T/A		0–DEG DEF	45–DEG DEF
BHH036	900	0.09	0.06	0.11	0.06	0.02	0.03	0.05
	960	0.11	0.07	0.12	0.07	0.03	0.03	0.06
	1020	0.12	0.08	0.13	0.07	0.03	0.04	0.06
	1080	0.14	0.09	0.14	0.08	0.04	0.04	0.07
	1140	0.15	0.10	0.15	0.08	0.04	0.05	0.08
	1200	0.17	0.11	0.16	0.09	0.04	0.05	0.09
	1260	0.19	0.12	0.17	0.09	0.05	0.06	0.10
	1320	0.21	0.13	0.18	0.10	0.05	0.07	0.11
	1380	0.23	0.14	0.19	0.10	0.06	0.07	0.12
	1440	0.25	0.15	0.20	0.11	0.06	0.08	0.13
	1500	0.27	0.16	0.21	0.12	0.07	0.08	0.14
BHH048	1200	0.12	0.02	0.09	0.06	0.02	0.02	0.03
	1280	0.13	0.02	0.09	0.07	0.02	0.02	0.03
	1360	0.15	0.03	0.10	0.07	0.02	0.02	0.04
	1440	0.17	0.04	0.11	0.08	0.02	0.03	0.04
	1520	0.19	0.05	0.12	0.09	0.02	0.03	0.05
	1600	0.21	0.05	0.13	0.09	0.03	0.03	0.05
	1680	0.23	0.06	0.13	0.10	0.03	0.04	0.06
	1760	0.25	0.07	0.14	0.10	0.03	0.04	0.07
	1840	0.27	0.08	0.15	0.11	0.04	0.04	0.07
	1920	0.30	0.08	0.16	0.12	0.04	0.05	0.08
	2000	0.32	0.09	0.17	0.12	0.04	0.05	0.09
BHH060	1500	0.09	0.06	0.12	0.08	0.02	0.03	0.05
	1600	0.10	0.06	0.13	0.09	0.03	0.03	0.05
	1700	0.12	0.06	0.14	0.10	0.03	0.04	0.06
	1800	0.14	0.07	0.15	0.11	0.03	0.04	0.07
	1900	0.15	0.07	0.16	0.11	0.04	0.05	0.08
	2000	0.17	0.08	0.17	0.12	0.04	0.05	0.09
	2100	0.19	0.08	0.18	0.13	0.05	0.06	0.09
	2200	0.21	0.08	0.20	0.14	0.05	0.06	0.10
	2300	0.22	0.09	0.21	0.15	0.06	0.07	0.11
	2400	0.24	0.09	0.22	0.16	0.06	0.08	0.12
	2500	0.26	0.10	0.24	0.17	0.07	0.08	0.13

NOTES: All values are in inches wc.
All pressure drops are with dry coil

ACCESSORIES

DISCHARGE GRILLE PLENUM

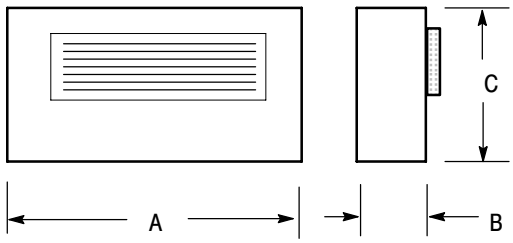

RETURN AIR GRILLE

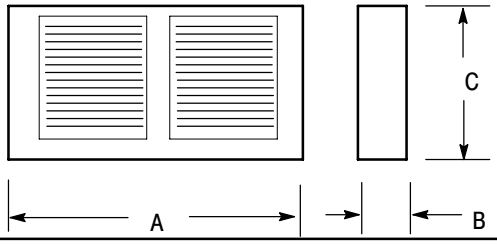

DISCHARGE GRILLE PLENUM

MODEL	A	B	C	WT
AGD36BHGPA	36.5	6.0	18.0	20
AGD48BHGPA	45.0	6.0	22.0	27
AGD60BHGPA	45.0	6.0	22.0	27

RETURN AIR GRILLE

MODEL	A	B	C	WT
AGR36BHRGA	27.5	2.0	16.0	7
AGR48BHRGA	36.0	2.0	20.0	9
AGR60BHRGA	36.0	2.0	20.0	9

HOT WATER COILS

MODEL	USED ON	2 ROW WATER CONNECTION
AHW36HH2A	3 TON	7/8 OD SWT
AHW48HH2A	4 TON	7/8 OD SWT
AHW60HH2A	5 TON	1 1–/8 OD SWT

Specifications subject to change without notice.

ACCESSORIES CONT.

R–22 Heat Pump By Pass Kit (Field Installed)

MODEL	USED ON
AHB01A	3 TON
AHB02A	4 & 5 TON

Note: Used with R–22 coils only, not required for R–410A coils.

MIXING BOX CONTROL PACKAGES

MODEL	USED FOR *
AEK3PMA	3 Position Economizer
AEKFMMA	Fully Modulating Economizer

* Used with mixing boxes to create 3 position or fully modulating economizer.

MIXING BOX WITH LOW LEAK DAMPERS

USED ON (TONS)	MODEL	LENGTH	WIDTH	HEIGHT	DUCT WIDTH	DUCT HEIGHT	TOP CLEARANCE	APPROXIMATE SHIPPING WEIGHT	FILTERS SIZE	QTY
		A	B	C	D	E	F			
3	AMB36MBA	27.0	27.7	16.4	25.9	11.6	4.9	90	16x25x2	2
4 & 5	AMB60MBA	27.0	36.2	20.4	34.3	15.0	5.5	140	16x32x2	2

NOTE: May be attached to air unit for top/rear or bottom/rear duct connection. (Barometric relief not included in mixing box, field installed if required.)

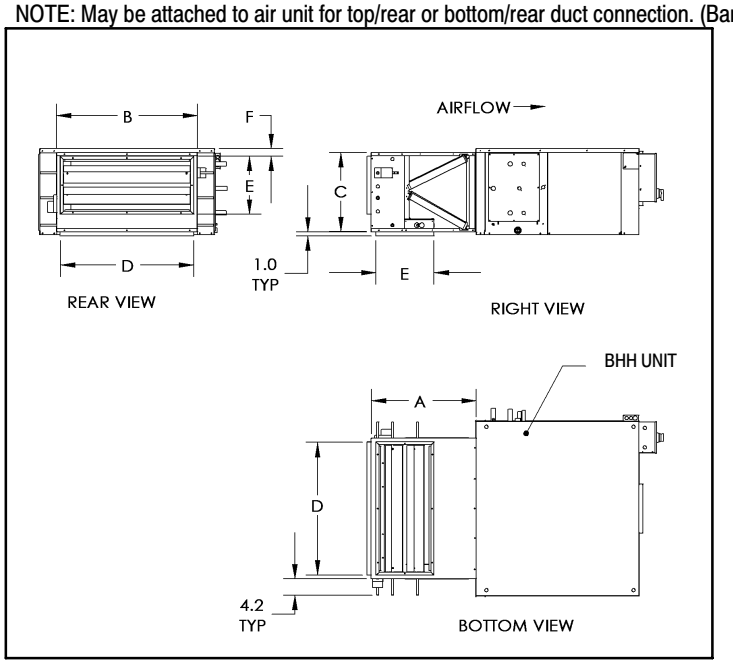

Heater Model # – C–60BH–(Kw)–(Phase)–(Voltage)

Voltage / Phase	Kw Range	Stages **	Used On
208 / 3	2.1 – 9.0	1	BHH060M*A
208 / 3	9.1 – 15.0	2	
208 / 3	15.1 – 17.2	2	
208 / 3	17.3 – 19.6	2	
240 / 3	2.1 – 10.0	1	
240 / 3	10.1 – 15.0	2	
240 / 3	15.1 – 17.0	2	
240 / 3	17.1 – 19.6	2	
480 / 3	2.1 – 19.6	1	

AVAILABLE OPTIONS:

1. CLASS 2 CONTROL TRANSFORMER, 24V
   A. One and two stage heaters
   B. Three and four stage heaters
2. SINGLE POINT LINE CONNECTION
   A. Heater and motor voltage must be the same
   B. Fan relay, motor circuit fusing and control transformer. (See item 3 for recommended disconnect switch.)
3. DOOR INTERLOCKING DISCONNECT SWITCH
   A. 40 AMP Unit
   B. 80 AMP Unit
   C. 100 AMP Unit
4. TWO, THREE, and FOUR STAGE PROGRAMMABLE THERMOSTAT (Wall or Duct Sensor–Specify)

Other options are available.

** Standard staging, consult factory for optional staging.

NOTE: If an electric heater is not installed with air handler, a field supplied transformer and contactor will be required for operation.

Electric Heaters are non–stock items and may be purchased directly from the O.E.M. supplier. For pricing information or ordering contact:

BEL THERMAL UNITS (BTU)
3640 N.E. 4th Ave.
Ft. Lauderdale, Fl. 33334
Tel: (954) 566–0043
Fax: (800) 956–0002
www.BELTHERMAL.com

When ordering, complete the heater model number with the desired kW, Phase, & voltage. Example: The model number for a 10.5kW, 3 Phase, 240 volt heater to go on a BHH048M*A would be C–48BH–10.5–3–240. (kW is available in increments of 0.10kW.)

ELECTRIC HEAT ACCESSORY

Heater Model # – C–36BH–(kW)–(Phase)–(Voltage)

Voltage / Phase	kW Range	Stages **	Used On
208 / 3	2.1 – 9.0	1	BHH036M*A
208 / 3	9.1 – 10.0	2	
208 / 3	10.1 – 12.0	2	
240 / 3	2.1 – 10.0	2	
240 / 3	10.1 – 12.0	2	
480 / 3	2.1 – 10.0	1	
480 / 3	10.1 – 12.0	1	

Heater Model # – C–48BH–(kW)–(Phase)–(Voltage)

Voltage / Phase	kW Range	Stages **	Used On
208 / 3	2.1 – 9.0	1	BHH048M*A
208 / 3	9.1 – 15.0	2	
208 / 3	15.1 – 17.0	2	
240 / 3	2.1 – 10.0	1	
240 / 3	10.5 – 15.0	2	
240 / 3	15.1 – 17.0	2	
480 / 3	2.1 – 17.0	1	