TEMPSTAR®
Heating and Cooling Products

OLR
Product Specifications

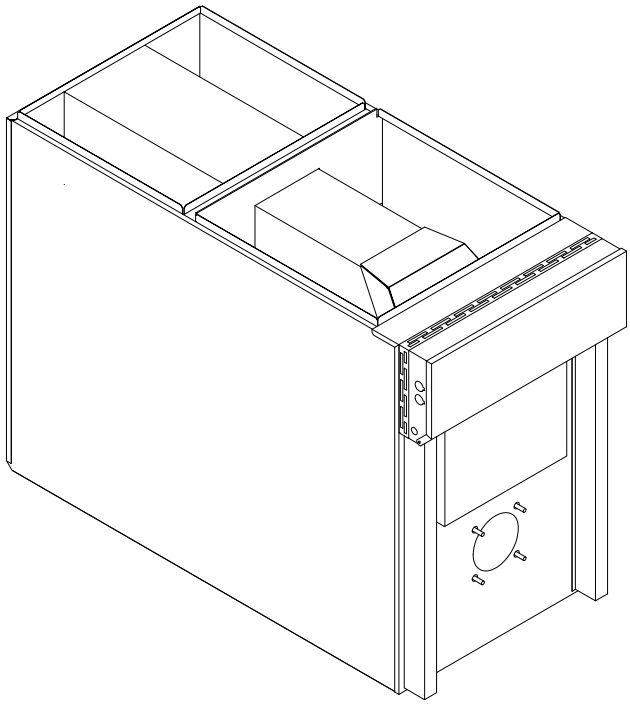

Illustrations and photographs are only representative.
Some product models may vary.

LO–BOY OIL FURNACE

FEATURES

- **Stainless Steel construction** – Heavy gauge heat exchanger quickly transfers heat to the ambient air
- **Multi–speed Direct Drive Motor** – permanently lubricated for long life performance
- **Easy Access** – control panel
- **Low profile** – OLR098 is 33–3/4 inches (857 mm) high, OLR112 is 33–3/4 inches (857mm) high, OLR154 is 39–1/4 inches (997mm) high
- **Sound attenuator** – High density acoustic wool dampens combustion sound
- **Burners** – Choice of high static pressure oil burners

  Beckett NX, Riello 40–F3/40–BF3/40–BF5 (Burners ordered and shipped separately)
- **Inspection port** – External for easy access and sealed – Adjust combustion parameters and simplify inspections
- **Accessories included** – Barometric draft regulator, internal filter rack and air filter
- **High quality finish** – High gloss baked
- **Efficiency** – AFUE up to 86.8% Canada, 86.6% US
- **Approved** – For chimney vent and sealed combustion installations

WARRANTY *

- Lifetime heat exchanger limited warranty with timely registration
- 5 year parts limited warranty

– With timely registration, an additional 5 year parts limited warranty

* Applies to original purchaser/homeowner, some limitations may apply. See warranty certificate for complete details.

C US

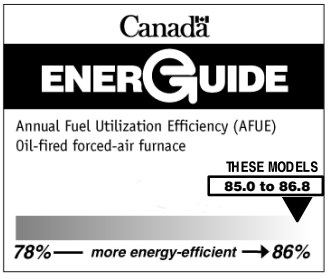

ONLY applies to applications in Canada where the furnace is installed in the conditioned space, per sections 5.35.1.2 and 4.7.1.1 of CSA standard B212 dated October 2000.

Model Number	Input (BTU/h)	Efficiency AFUE ‡		Cooling capacity @ .5 in wc (125 Pa)	Dimensions – in(mm) H x W x D†	Shipping Wt. Lbs. (Kg.)
		CANADA	US			
OLR098A12	77,000–98,000	85.0–86.1	85.0–85.7	3 Tons	33–3/4 x 21 x 47 (857 x 533 x 1194)	175 (79)
OLR112A16	95,200–112,000	85.6–86.5	85.0–86.3	4 Tons	33–3/4 x 21 x 48 (857 x 533 x 1219)	195 (89)
OLR154F20	126,000–154,000	85.1–86.8	85.0–86.6	5 Tons	39–1/4 x 24–7/8 x 52 (997 x 632 x 1320)	270 (122.5)

‡ Meets EnergyStar guidelines
† Depth is without the burner

Specifications are subject to change without notice.

445 21 1026 03 Feb. 2011

MODEL NUMBER IDENTIFICATION GUIDE

MODEL NUMBER	O	L	R	098	A	12	#

REVISION

FUEL
O = Oil

PRODUCT GROUP
U = Upflow
D = Downflow
H = Horizontal
C = Downflow/Horizontal
T= Upflow/Horizontal
M = Multiposition
L= Lo–Boy

SERIES
F = Front Breech
R = Rear Breech
V = Variable Motor

AIR FLOW
10 = 1000 CFM
16 = 1600 CFM
12 = 1200 CFM
20 = 2000 CFM
14 = 1400 CFM

SUPPLY PLENUM SIZE
A = 20 x 20
D = 19 x 20
B = 24 x 24
E = 19 x 24
C = $21^1/_8$ x $21^1/_2$
F = 20 x 24
G = 22 x 30
J = 16 x 19
K = $17^1/_2$ x 19

INPUT, MBTUH

DIMENSIONS AND CLEARANCES

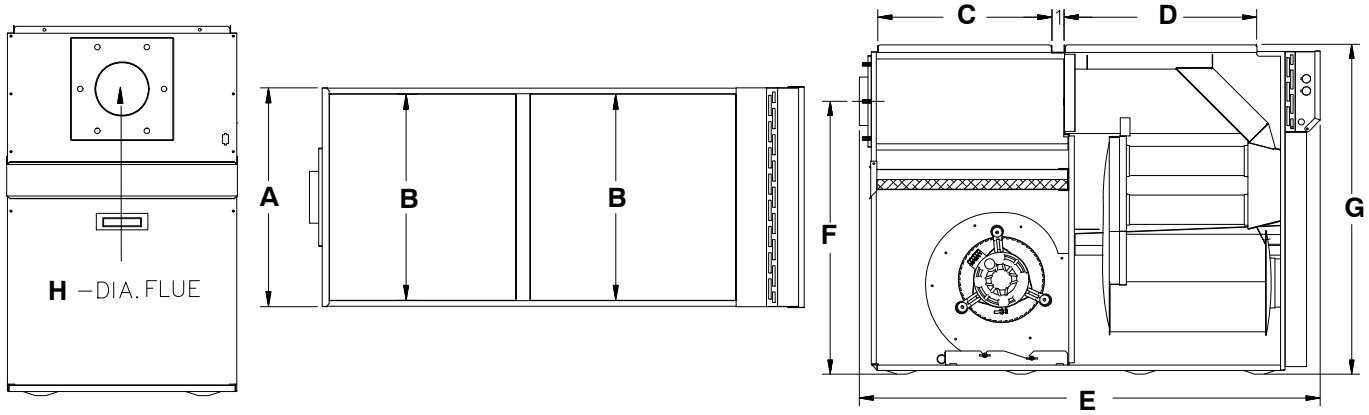

FURNACE DIMENSIONS – in(mm)

OLR	DIMENSIONS – inches A	B	C	D	E	F	G	H
098	21	19-3/4	18	20	47	27-7/8	33-3/4	5
112	21	19-3/4	19-3/4	19-5/8	46-1/2	28-1/8	33-3/4	5
154	24-7/8	23-3/4	19-3/4	23-3/4	51-7/8	32-1/2	39-1/4	6-1/8

OLR	DIMENSIONS – millimeters A	B	C	D	E	F	G	H
098	533	502	457	508	1194	708	857	127
112	533	502	502	498	1181	714	857	127
154	632	603	502	603	1318	826	997	156

MINIMUM INSTALLATION CLEARANCES FROM COMBUSTIBLE MATERIALS – in(mm)

Location	Application	Clearances	Recommended Access for Service
Sides	Furnace	1 (25.4)	24 (609.6)
	Supply plenum – within 6ft (1.8m) of furnace	1 (25.4)	
Back	Access panel to blower	4 (101.6)	24 (609.6)
Top	Furnace or Plenum	2 (50.8)	
	Horizontal warm air duct – within 6ft (1.8m) of furnace	2 (50.8)	
Bottom	Furnace (combustible floor)	0	
Flue pipe	Horizontally or below flue pipe	4 (101.6)	
	Vertically above flue pipe	9 (228.6)	
Front	Furnace (burner end)[1]	8 (203.2)	24 (609.6)

FURNACE SPECIFICATIONS		
Model:	**OLR098**	
Rating & Performance		
Firing rate (USGPH)*	0.55	0.70
Input (BTU/h)*	77,000	98,000
Maximum heating capacity (BTU/h)*	66,000	82,000
Heating temperature rise (°F/°C)*	55 – 85 / 31 – 47	
Flue draft with chimney (in. w.c. / Pa)	–0.06 to –0.025/–14.9 to –6.2	
Overfire pressure with chimney (in. w.c. / Pa)	–0.035 to +0.010 / –8.7 to +2.5	
Flue draft with direct vent (in. w.c. / Pa)	+0.05 to +0.20 / +12.5 to +50	
Overfire pressure with direct vent (in. w.c. / Pa)	+0.03 to +0.15 / +7.5 to +37.5	
Beckett Burner; (Chimney or Direct Vent)	**NX56LQ**	
Burner tube insertion length	1 3/4 (45mm)	
Head type	6–slot LQ head	
Nozzle (Delavan)	0.50–60A	0.60–60A
Minimum and Maximum pump pressure (PSIG)*	125 to 180	135 to 170
(kPa)*	862 to 1241	930 to 1172
Head/Air setting	1.0	2.5
CANADIAN regulations and CSA B212 standard** AFUE %	86.1 ‡	85.0 ‡
US regulations and ASHRAE 103 standard AFUE %	85.7 ‡	85.0 ‡
Riello Burner; (Chimney)	**40–F3 with Air Inlet Damper**	
Burner tube insertion length	2 3/4 (70mm)	
Nozzle (Delavan)	0.50–70A	0.60–70A
Minimum and Maximum pump pressure (PSIG)*	125 to 180	135 to 170
(kPa)*	862 to 1241	930 to 1172
Combustion air adjustment (turbulator/damper)	0 / 2.0	0 / 3.5
CANADIAN regulations and CSA B212 standard** AFUE %	86.1 ‡	85.0 ‡
US regulations and ASHRAE 103 standard AFUE %	85.7 ‡	85.0 ‡
Riello Burner; (Direct Vent)	**40–BF3**	
Burner tube insertion length	2 3/4 (70mm)	
Nozzle (Delavan)	0.50–70A	0.60–70A
Minimum and maximum Pump pressure (PSIG)*	125 to 180	135 to 170
(kPa)*	862 to 1241	930 to 1172
Combustion air adjustment (turbulator/damper)	0 / 3.5	1 / 5.25
CANADIAN regulations and CSA B212 standard** AFUE %	86.1 ‡	85.0 ‡
US regulations and ASHRAE 103 standard AFUE %	85.7 ‡	85.0 ‡
Electrical System		
Volts – Hz – Phase	115 – 60 – 1	
Rated current (Amps)	12.2	
Minimum ampacity for wire sizing (Amps)	13.7	
Max. fuse size (Amps)	15	
Control Transformer (VA)	40	
External control power available Heating (VA)	40	
Cooling (VA)	30	
Blower Data (Side Air Return)		
Heating blower speed at 0.20 in. w.c. (50 Pa)	Med–Low	Med–High
Heating blower speed at 0.50 in. w.c. (125 Pa)	Med–Low	High
Motor (HP) / Number of speeds	1/3 HP / 4 speeds	
Blower wheel size in(mm) – tight housing	10 x 10 (254 x 254)	
General Information		
Overall dimensions W x D x H – in(mm)	21 x 47 x 34 (533 x 1194 x 864)	
Supply air opening – in(mm)	20 x 20 (508 x 508)	
Return air opening – in(mm)	18 x 20 (457 x 508)	
Filter size, 1 or 2 inch (25 or 51mm) – in(mm)	20 x 20 (508 x 508)	
Shipping weight – lbs(kg)	175 (80)	
Air conditioning at .5 in. w.c. (125 Pa), maximum output (tons)	3	

Specifications subject to change without notice.

FURNACE SPECIFICATIONS

Model	OLR112		OLR154	
Rating & Performance				
Firing rate (USGPH)*	0.68	0.8	0.9	1.1
Input (BTU/h)*	95,200	112,000	126,000	154,000
Maximum heating capacity (BTU/h)*	81,100	94,100	107,700	129,700
Heating temperature rise *	30 – 42°C / 55 – 75°F		30 – 42°C / 55 – 75°F	
Flue draft with chimney (in. w.c. / Pa)	–0.06 to –0.025 / –14.9 to –6.2		–0.06 to –0.025/–14.9 to –6.2	
Overfire pressure with chimney (in. w.c. / Pa)	–0.035 to +0.025 / –8.7 to +6.2		–0.035 to +0.025 / –8.7 to +6.2	
Flue draft with direct vent (in. w.c. / Pa)	+0.03 to +0.15 / +12.5 to +37.5		+0.05 to +0.12 / +12.5 to +30	
Overfire pressure with direct vent (in. w.c. / Pa)	+0.05 to +0.17 / +12.5 to +42.3		+0.06 to +0.16 / +12.5 to +40	
Beckett Burner Model NX; (Chimney or Direct Vent)	**NX56LQ**		**NX56LC**	
Burner tube insertion length	1–3/4 (45mm)		1–3/4 (45mm)	
Head type	6 – slot LQ head		6 – slot LC head	
Nozzle (Delavan)	0.60 – 60A	0.70 – 60A	0.75 – 60B	0.90 – 60B
Minimum and Maximum pump pressure (PSIG)*	130 to 160	130 to 160	145 to 175	150 to 180
(kPa)*	896 to 1103	896 to 1103	1000 to 1206	1034 to 1241
Head/Air setting	1.5	2.5	2.5	3.25
CANADIAN regulations and CSA B212 standard** AFUE %	86.5 ‡	85.6 ‡	86.8 ‡	85.1 ‡
US regulations and ASHRAE 103 standard AFUE %	86.3 ‡	85.0 ‡	86.6 ‡	85.0 ‡
Riello Burner Model 40–F3; (Chimney)	**F3 with Air Inlet Damper**		**F5 with ELECTRIC AIR DAMPER**	
Burner tube insertion length	2–3/4" (70mm)		2–3/4" (70mm)	
Nozzle (Delavan)	0.60 – 70A	0.70 – 70A	0.75 – 70A	0.90 – 70A
Minimum and Maximum pump pressure (PSIG)*	130 to 160	130 to 160	145 to 175	150 to 180
(kPa)*	896 to 1103	896 to 1103	1000 to 1206	1034 to 1241
Combustion air adjustment (turbulator/damper)	1 / 2.6	2 / 3.1	1.5 / 2.25	2.5 / 2.75
CANADIAN regulations and CSA B212 standard** AFUE %	86.5 ‡	85.6 ‡	86.8 ‡	85.1 ‡
US regulations and ASHRAE 103 standard AFUE %	86.3 ‡	85.0 ‡	86.6 ‡	85.0 ‡
Riello Burner Model 40; (Direct Vent)	**40–BF5**			
Burner tube insertion length	2–3/4" (70mm)		2–3/4" (70mm)	
Nozzle (Delavan)	0.60 – 70A	0.70 – 70A	0.75 – 70A	0.90 – 70A
Minimum and maximum Pump pressure (PSIG)*	130 to 160	130 to 160	145 to 175	150 to 180
(kPa)*	896 to 1103	896 to 1103	1000 to 1206	1034 to 1241
Combustion air adjustment (turbulator/damper)	0 / 2.75	0 / 3.25	1.0 / 3.75	3.0 / 4.25
CANADIAN regulations and CSA B212 standard** AFUE %	86.5 ‡	85.6 ‡	86.8 ‡	85.1 ‡
US regulations and ASHRAE 103 standard AFUE %	86.3 ‡	85.0 ‡	86.6 ‡	85.0 ‡
Electrical System				
Volts – Hz – Phase	115 – 60 – 1		115 – 60 – 1	
Rated current (Amps)	12.6		16.9	
Minimum ampacity for wire sizing (Amps)	15.2		19.5	
Max. fuse size (Amps)	20		20	
Control Transformer (VA)	40		40	
External control power available Heating (VA)	40		40	
Cooling (VA)	30		30	
Blower Data (Side Air Return)				
Heating blower speed at 0.25 in. w.c. (50 Pa)	Med–Low	Med–High	Med–Low	Med–High
Heating blower speed at 0.50 in. w.c. (125 Pa)	Med–Low	Med–High	Med–Low	Med–High
Motor (HP) / Number of speeds	1/2 HP / 4 speeds		1.0 HP / 4 speeds	
Blower wheel size in(mm) – tight housing	12 x 9 (305 x 229) tight housing		12 x 10 (305 x 254) tight housing	
General Information				
Overall dimensions W x D x H – in(mm)	21 x 47 x 33–3/4 (533 x 1194 x 857)		24–7/8 x 52 x 39–1/4 (632 x 1320 x 997)	
Supply air opening – in(mm)	19–3/4 x 19–3/4 (502 x 502)		23–3/4 x 23–3/4 (603 x 603)	
Return air opening – in(mm)	19–3/4 x 19–3/4 (502 x 502)		23–3/4 x 19–3/4 (603 x 502)	
Filter size, 1 or 2 inch (25 or 51mm) – in(mm)	20 x 20 x 1 or 2 (508 x 508 x 25 or 51) 16 x 20 x 1 (406 x 508 x 25) quantity = 2		20 x 24 x 1 or 2 (508 x 610 x 25 or 51) quantity = 1 16 x 24 x 1 (406 x 610 x 25) quantity = 2	
Shipping weight – lbs(kg)	195 (89)		270 (122.5)	
Air conditioning at .5 in. w.c. (125 Pa), maximum output (tons)	4		5	

* INPUT & OUTPUT ADJUSTMENT
Pump pressure can be adjusted to maintain proper firing rate.
Adjust flue gas temperature between 400 and 575 °F/204 and 301°C
Adjust fan speed for air temperature rise of 55 to 85 °F/30 to 47°C.

** AFUE value established after minimum 20 hours of continuous operation.

‡ Meets EnergyStar guidelines

BLOWER PERFORMANCE DATA (Air Delivery – with filter)

OLR098

OLR098	External Static Pressure – in. w.c.					
	0.20	0.30	0.40	0.50	0.60	0.70
Speed	CFM					
HIGH	1420	1335	1240	1180	1085	1025
MED–HIGH	1275	1230	1170	1095	1045	960
MED–LOW	1015	1000	955	915	860	785
LOW	815	785	775	730	690	635

OLR098	External Static Pressure – Pa					
	50	75	100	125	149	174
Speed	L/s					
HIGH	670	630	585	557	512	484
MED–HIGH	602	580	552	517	493	453
MED–LOW	479	472	451	432	406	370
LOW	385	370	366	345	326	300

OLR112

OLR112	External Static Pressure – in. w.c.					
	0.20	0.30	0.40	0.50	0.60	0.70
Speed	CFM					
HIGH	1680	1640	1600	1590	1540	1460
MED–HIGH	1210	1190	1180	1160	1130	1110
MED–LOW	1110	1070	1040	1010	970	930
LOW	960	940	920	890	860	830

OLR112	External Static Pressure – Pa					
	50	75	100	125	149	174
Speed	L/s					
HIGH	793	774	755	750	727	689
MED–HIGH	571	562	557	547	533	524
MED–LOW	524	505	491	477	458	439
LOW	453	444	434	420	406	392

OLR154

OLR154	External Static Pressure – in. w.c.					
	0.20	0.30	0.40	0.50	0.60	0.70
Speed	CFM					
HIGH	2185	2115	2045	1995	1905	1820
MED–HIGH	1900	1845	1810	1760	1685	1635
MED–LOW	1475	1465	1460	1435	1380	1335
LOW	1140	1125	1110	1100	1085	1060

OLR154	External Static Pressure – Pa					
	50	75	100	125	149	174
Speed	L/s					
HIGH	1031	998	965	941	899	859
MED–HIGH	897	871	854	831	795	772
MED–LOW	696	691	689	677	651	630
LOW	538	531	524	519	512	500

ACCESSORIES

Model No.	Burners	Nozzle (supplied)
OLR098	N01J050 Beckett (chimney or direct)	(0.50–60A) – N03F014
		0.60–60A – N03F017
	N01F054 Riello (chimney)	(0.50 – 70A) – N03F015
		0.60–70A – N03F026
	N01F055 Riello (direct)	(0.50 – 70A) – N03F015
		0.60–70A – N03F026
OLR112	N01J052 Beckett (chimney or direct)	(0.60–60A – N03F017)
		0.70–60A – N03F030
	N01F051 Riello (chimney)	(0.60–70A – N03F026)
		0.70–70A – N03F024
	N01F052 Riello (direct)	(0.60–70A – N03F026)
		0.70–70A – N03F024
OLR154	N01J053 Beckett (chimney or direct)	(0.75–60B) – N03H010
		0.90–60B – N03H029
	N01F053 Riello (chimney)	(0.75–70A) – N03F028
		0.90–60A – N03F029
	N01F056 Riello (direct)	(0.75–70A) – N03F028
		0.90–60A – N03F026

Model No	Description
N03F014	Nozzle, Oil Burner, Delavan, 0.50 GPH/60°A–Beckett (supplied with burner)) for OLR098
N03F015	Nozzle, Oil Burner, Delavan, 0.50 GPH/70° A–Riello (supplied with burner)) for OLR098
N03F017	Nozzle, Oil Burner, Delavan, 0.60 GPH/60°A–Beckett for OLR098 and OLR112
N03F026	Nozzle, Oil Burner, Delavan, 0.90 GPH/60° A–Riello for OLR154
N03F028	Nozzle, Oil Burner, Delavan, 0.75 GPH/60° A–Riello for OLR154
N03F029	Nozzle, Oil Burner, Delavan, 0.90 GPH/60° A–Riello for OLR154
N03H010	Nozzle, Oil Burner, Delavan, 0.75 GPH/60° B–Beckett for OLR154
N03H029	Nozzle, Oil Burner, Delavan, 0.90 GPH/60° B–Beckett for OLR154
N01F051	Riello Burner (Chimney Vent) for OLR112
N01F052	Riello Burner (Direct Vent) for OLR112
N01F053	Riello Burner (Chimney Vent) for OLR154
N01F054	Riello Burner (Chimney Vent) for OLR098
N01F055	Riello Burner (Direct Vent) for OLR098
N01F056	Riello Burner (Direct Vent) for OLR154
N01J050	Beckett NX Oil Burner (Chimney or Direct Vent) for OLR098
N01J052	Beckett Burner (Chimney or Direct Vent) for OLR112
N01J053	Beckett Burner (Chimney or Direct Vent) for OLR154
IFV09810	4″ Ø x 10′ Insulated Flex Vent for 4″ Breech Models 10ft (3m) for OLR098 and OLR112
IFV09820	4″ Ø x 20′ Insulated Flex Vent for 4″ Breech Models 20ft (6m) for OLR098 and OLR112
IFV508	5″ Ø x 8′ Insulated Flex Vent for 5″ Breech Models 8ft (2.4m) for OLR154
IFV520	5″ Ø x 20′ Insulated Flex Vent for 5″ Breech Models 20ft (6m) for OLR154
VTK098	Vent Terminal Kit 4″ (102mm) for OLR098 and OLR112
VTK3	Vent Terminal Kit 5″ (127mm) for OLR154