TEMPSTAR®
Heating and Cooling Products

MV
Product Specifications

MODULAR VARIABLE SPEED BLOWER CABINET

2, 3, 4, and 5 TONS

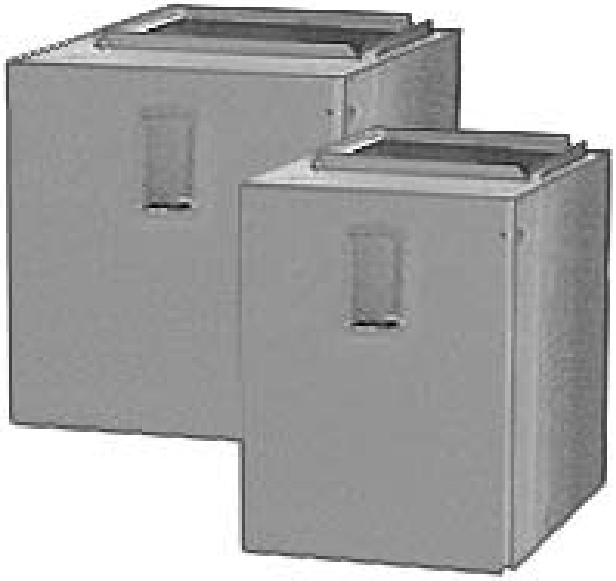

FEATURES
- Variable Speed modular blower
- Supports two–stage outdoor units
- Dehumidification Speed: 80% Airflow
- Efficient low continuous fan selection: 50% Airflow
- Upflow, horizontal right or left applications
- Downflow requires sub–base accessory
- Electronic fan control board
- Adjustable Blower time delay
- Accepts accessory two stage outdoor thermostats
- Matches with AC and HP cased coils (Hot water coil may be used, but doesn't match case size)
- 208/230–1–60 supply voltage
- Requires a "NO HEAT KIT" if installed without electric heat.
- Field installed electric heater packages from 5kW–25kW, single or three phase available separately

SERVICE
- Direct drive slide–out blower assembly

QUALITY
- Internally lined with ½ inch(12.7mm) insulation
- Thermosetting powder coated steel cabinet

WARRANTY
- 5 year parts limited warranty

ARI PERFORMANCE CERTIFIED ARI Standard 210/240 Unitary Heat Pumps

ARI PERFORMANCE CERTIFIED ARI Standard 210/240 Unitary Air Conditioners

Rated in accordance with ARI Standard 210 and/ or 240. Certification applies only when used with proper components as listed with ARI.

C US

Model	Nominal Tons	CFM Range		Motor HP	Dimensions H x W x D in(mm)	Unit Wt. lbs/kg	Ship Wt. lbs/kg
		Low	High				
MV08B1500B	2	350	1200	1/2	24 x 15½ x 20½ (610 x 394 x 521)	56/25	60/27
MV12F1900B	3	415	1400	1/2	24 x 19⅛ x 20½ (610 x 495 x 521)	58/26	63/29
MV16J2200B	4	425	1600	3/4	24 x 22¾ x 20½ (610 x 578 x 521)	69/31	75/34
MV20L2400B	5	540	2000	3/4	24 x 24½ x 20½ (610 x 622 x 521)	72/32	76/35

UNIT SPECIFICATIONS – BLOWER COILS

	Model Number	MV08B1500B	MV12F1900B	MV16J2200B	MV20L2400B
Application		Upflow / Horizontal / Downflow *			
Electrical Data **	Volts-Phase-Hz.	208/230-1-60			
	Minimum Circuit Ampacity	6.3	6.3	9.1	9.1
	Time Delay Fuse (Amps)	15			
	Maximum Fuse or Breaker Size (Amps)	15			
Blower Data	Size	DD10 – 7	DD10 – 8	DD10 – 9	DD10 – 9
	Horsepower-Speed	1/2 – VAR	1/2 – VAR	3/4 – VAR	3/4 – VAR
	Full Load Rated-Amps	5.0	5.0	7.3	7.3
Transformer		(208-230/24 VAC) 40 VA			
Weight	Unit/Shipping Lbs.(Kg.)	56/60 (25/27)	58/63 (26/29)	69/75 (31/34)	72/76 (32/35)

* Accessory subbase kit required for downflow application

** Disregard if electric heat is added. Refer to Electric Heat Table.

DIMENSIONS AND CLEARANCES

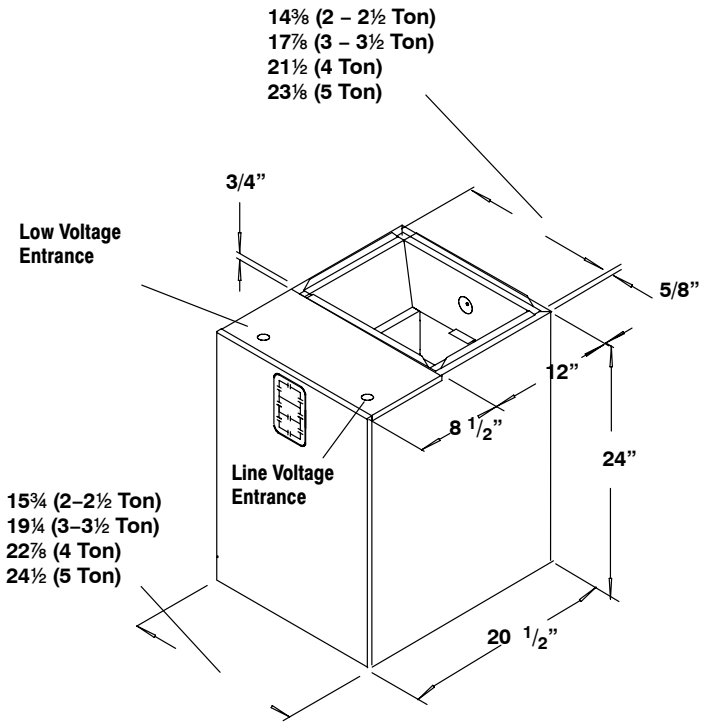

CLEARANCES	
NO HEATERS	
All Sides	0”
From Supply Duct	0”
Recommended Service From Front (Service for blower, filter if installed)	20”(508mm)
WITH HEATERS	
All Sides	0”
From First Three Feet of Supply Duct to Combustibles	1”
From Duct after Three Feet	0”
Recommended Service From Front (Service for blower, heaters if installed)	20”(508mm)

ALL DIMENSIONS IN INCHES
1 IN = 25.4 MM

MODEL NUMBER IDENTIFICATION GUIDE

PRODUCT FAMILY
M = MODULAR

B = MODULAR BLOWER (115V)
F = MODULAR ELECTRIC FURNACE (208/230V)
V = MODULAR VARIABLE SPEED BLOWER (208/230V)

NOMINAL CFM RANGE
08 = 350–1200
12 = 415–1400
16 = 425–1600
20 = 540–2000

M	V	12	F19	00	B	2

SERIES
SALES CODES
FIELD INSTALLED HEATER
COIL WIDTH MATCH
B15 = 15½ Cabinet
F19 = 19⅛ Cabinet
J22 = 22¾ Cabinet
L24 = 24½ Cabinet

Specifications subject to change without notice.

AIRFLOW ADJUST TABLE

MODEL #	AUX HEAT RANGE (KW/CFM)			
VIOLET Wire Selection	A	B	C	D
MV08	15kw	––	10kw	5 thru 7.5kw
MV12	––	15 thru 20kw	10kw	5 thru 7.5kw
MV16	––	25kw	––	5 thru 20kw
MV20	––	––	25kw	5 thru 20kw

OUTDOOR UNIT SIZE

MODEL #	OUTDOOR UNIT SIZE IN BTU'S			
BLUE Wire Selection	A	B	C	D
MV08	036	030	024	018
MV12	042	036	030	024
MV16	048	042	036	030
MV20	060	048	042	036

CFM RANGE

Modular Unit Size	Outdoor Unit Size	CFM Range
MV08	018	350 - 1200
	024	
	030	
	036	
MV12	024	415 - 1400
	030	
	036	
	042	
MV16	030	425 - 1600
	036	
	042	
	048	
MV20	036	540 - 2000
	042	
	048	
	060	

MODULAR AIRFLOW DELIVERY (CFM) IN COOLING MODE (EITHER A/C OR HP)

Modular Unit Size	Outdoor Unit Size	Single–Stage A/C Cooling		Two–Stage Cooling				Fan Only		
				A/C Cooling – High		A/C Cooling – Low				
		Nominal	Dehum	Nominal	Dehum	Nominal	Dehum	LOW	MED	HI
MV08	18	525	420	––	––	––	––	350	420	525
	24	700	560	700	560	560	450	350	560	700
	30	875	700	––	––	––	––	440	700	875
	36	1050	840	1050	840	840	670	525	840	1050
MV12	24	700	560	700	560	560	450	415	560	700
	30	875	700	––	––	––	––	440	700	875
	36	1050	840	1050	840	840	670	525	840	1050
	42	1225	980	––	––	––	––	615	980	1225
MV16	30	875	700	––	––	––	––	440	700	875
	36	1050	840	1050	840	840	670	525	840	1050
	42	1225	980	––	––	––	––	615	980	1225
	48	1400	1120	1400	1120	1120	900	700	1120	1400
MV20	36	1050	840	1050	840	840	670	540	840	1050
	42	1225	980	––	––	––	––	615	980	1225
	48	1400	1120	1400	1120	1120	900	700	1120	1400
	60	1750	1400	1750	1400	1400	1120	875	1400	1750

NOTES:

1. The above airflows result with the AC/HP CFM ADJUST select jumper set on NOM.
2. Airflow can be adjusted +15% or –10% by selecting Hi or Lo respectively for all modes except fan only.
3. Dry coil at 230 volts and with 10kW heater and filter installed.
4. Airflows shown are valid for systems with total static pressure between 0.1 and 0.7 in wc.

MODULAR BLOWER WITHOUT ELECTRIC HEAT

Unit Size	Volts	Phase	Hertz	Supply Circuit No.	H.P.	Max. Motor Amps	MCA Branch Circuit AMP	Max Over–current Protection Devise (Amps)	Supply Wire 75°C copper			Ground Wire	
									# of Wires	Min Size	Max. Ft. Length	# of Wires	Min Size
MV08	208	1	60	Single	1/2	5.0	6.3	15	2	14	118	1	14
	230												
MV12	208	1	60	Single	1/2	5.0	6.3	15	2	14	118	1	14
	230												
MV16	208	1	60	Single	3/4	7.3	9.1	15	2	14	82	1	14
	230												
MV20	208	1	60	Single	3/4	7.3	9.1	15	2	14	82	1	14
	230												

Conversion: 1 foot = .305 meters

MODULAR AIRFLOW DELIVERY (CFM) IN HEAT PUMP HEATING MODE ONLY

Modular Unit Size	Outdoor Unit Size	Single−Stage HP Heating		Two−Stage Heating				Fan Only		
				HP Heating − High		HP Heating − Low				
		Comfort	Eff	Comfort	Eff	Comfort	Eff	Low	Med	Hi
MV08	18	475	525	−−	−−	−−	−−	350	380	475
	24	630	700	630	700	505	560	350	505	630
	30	785	875	−−	−−	−−	−−	440	630	785
	36	945	1050	945	1050	755	840	525	755	945
MV12	24	630	700	630	700	505	560	415	505	630
	30	785	875	−−	−−	−−	−−	440	630	785
	36	945	1050	945	1050	755	840	525	755	945
	42	1100	1225	−−	−−	−−	−−	615	880	1100
MV16	30	785	875	−−	−−	−−	−−	440	630	785
	36	945	1050	945	1050	755	840	525	755	945
	42	1100	1225	−−	−−	−−	−−	615	880	1100
	48	1260	1400	1260	1400	1010	1120	700	1010	1260
MV20	36	945	1050	945	1050	755	840	540	755	945
	42	1100	1225	−−	−−	−−	−−	615	880	1100
	48	1260	1400	1260	1400	1010	1120	700	1010	1260
	60	1575	1750	1575	1750	1260	1400	875	1260	1575

NOTES:

1. The above airflows result with the AC/HP CFM ADJUST select jumper set on NOM.
2. Airflow can be adjusted +15% or −10% by selecting Hi or Lo respectively for all modes except fan only.
3. Dry coil at 230 volts and with 10kW heater and filter installed.
4. Airflows shown are valid for systems with total static pressure between 0.1 and 0.7 in wc.

ELECTRIC HEATER STATIC PRESSURE DROP − ESP IN WC Single−Phase

CFM	EHIA05	EHIA07	EHIA10	EHIA15	EHIA20	EHIA25
600	0.01	0.01	0.01	–	–	–
700	0.01	0.01	0.01	–	–	–
800	0.01	0.01	0.01	0.01	–	–
900	0.01	0.01	0.01	0.01	–	–
1000	0.01	0.01	0.01	0.01	0.02	–
1100	0.01	0.01	0.01	0.02	0.02	–
1200	0.01	0.01	0.01	0.02	0.02	–
1300	0.01	0.02	0.02	0.02	0.02	–
1400	0.01	0.02	0.02	0.02	0.03	0.03
1500	0.01	0.02	0.02	0.02	0.03	0.04
1600	0.01	0.02	0.02	0.03	0.03	0.04
1700	0.01	0.02	0.02	0.03	0.03	0.04
1800	0.01	0.02	0.02	0.03	0.04	0.04
1900	0.01	0.02	0.02	0.03	0.04	0.05
2000	0.01	0.02	0.02	0.03	0.04	0.05

ELECTRIC HEATER STATIC PRESSURE DROP − ESP IN WC Three−Phase

CFM	–	–	EHIA10	EHIA15	EHIA20	EHIA25
600	–	–	0.01	–	–	–
700	–	–	0.01	–	–	–
800	–	–	0.01	0.01	–	–
900	–	–	0.01	0.01	–	–
1000	–	–	0.01	0.01	0.02	–
1100	–	–	0.01	0.02	0.02	–
1200	–	–	0.01	0.02	0.02	–
1300	–	–	0.02	0.02	0.02	–
1400	–	–	0.02	0.02	0.03	0.03
1500	–	–	0.02	0.02	0.03	0.04
1600	–	–	0.02	0.03	0.03	0.04
1700	–	–	0.02	0.03	0.03	0.04
1800	–	–	0.02	0.03	0.04	0.04
1900	–	–	0.02	0.03	0.04	0.05
2000	–	–	0.02	0.03	0.04	0.05

TECHNICAL DATA Single Phase with Circuit Breaker

Heater Model	Supply Voltage	Nom. Heating BTUH	Heat KW	kW Per Element	Supply Circuit No.	Heater kW Per Circuit	Heater AMPS.	Max Motor AMPS.	FLA Total AMPS.	MCA Min Circuit Ampacity	Maximum Overcurrent Protective Device (AMPS.)	Recommended Supply Wire 75 ^{0} C. Copper # of Wires	Wire Size	Max. Length (Ft)	Ground Wire # of Wires	Min Size
EHIA05KB10	240	16378	4.8	4.8	Single	4.8	20.0	7.3	27.3	34.1	35	2	8	108	1	10
	208	12283	3.6	3.6	Single	3.6	17.3	7.3	24.6	30.8	35	2	8	119	1	10
EHIA07KB10	240	24567	7.2	3.6	Single	7.2	30.0	7.3	37.3	46.6	50	2	8	79	1	10
	208	18425	5.4	2.7	Single	5.4	26.0	7.3	33.3	41.6	45	2	8	88	1	10
EHIA10KB10	240	32756	9.6	4.8	Single	9.6	40.0	7.3	47.3	59.1	60	2	6	99	1	10
	208	24567	7.2	3.6	Single	7.2	34.6	7.3	41.9	52.4	60	2	6	111	1	10
EHIA15KB10	240	49134	14.4	4.8	Single	14.4	60.0	7.3	67.3	84.1	90	2	4	110	1	8
					Mult. 1	9.6	40.0	7.3	47.3	59.1	60	2	6	99	1	10
					Mult. 2	4.8	20.0	0	20.0	25.0	25	2	10	95	1	10
	208	36851	10.8	3.6	Single	10.8	51.9	7.3	59.2	74.0	80	2	4	126	1	8
					Mult. 1	7.2	34.6	7.3	41.9	52.4	60	2	6	111	1	10
					Mult. 2	3.6	17.3	0	17.3	21.6	25	2	10	109	1	10
EHIA20KB10	240	65513	19.2	4.8	Single	19.2	80.0	7.3	87.3	109.1	110	2	2	135	1	6
					Mult. 1	9.6	40.0	7.3	47.3	59.1	60	2	6	99	1	10
					Mult. 2	9.6	40.0	0	40.0	50.0	50	2	8	73	1	10
	208	49134	14.4	3.6	Single	14.4	69.2	7.3	76.5	95.7	100	2	3	122	1	6
					Mult. 1	7.2	34.6	7.3	41.9	52.4	60	2	6	111	1	10
					Mult. 2	7.2	34.6	0	34.6	43.3	45	2	8	85	1	10
EHIA25KB10	240	81891	24	4.8	Single	24	100.0	7.3	107.3	134.1	150	2	1/0	175	1	6
					Mult. 1	9.6	40.0	7.3	47.3	59.1	60	2	6	99	1	10
					Mult. 2	14.4	60.0	0	60.0	75.0	80	2	4	124	1	8
	208	61418	18	3.6	Single	18	86.5	7.3	93.8	117.3	125	2	1	159	1	6
					Mult. 1	7.2	34.6	7.3	41.9	52.4	60	2	6	111	1	10
					Mult. 2	10.8	51.9	0	51.9	64.9	70	2	6	90	1	10

Conversion: 1 foot = .305 meters

TECHNICAL DATA Single–Phase with Terminal Block

Heater Model	Supply Voltage	Nom. Heating BTUH	Heat KW	kW Per Element	Supply Circuit No.	Heater kW Per Circuit	Heater AMPS.	Max Motor AMPS.	FLA Total AMPS.	MCA Min Circuit Ampacity	Maximum Overcurrent Protective Device (AMPS.)	Recommended Supply Wire 75 ^{0} C. Copper # of Wire	Wire Size	Max. Length (Ft)	Ground Wire # of Wires	Min Size
EHIA05KN10	240	16378	4.8	4.8	Single	4.8	20.0	7.3	27.3	34.1	35	2	8	108	1	10
	208	12283	3.6	3.6	Single	3.6	17.3	7.3	24.6	30.8	35	2	8	119	1	10
EHIA07KN10	240	24567	7.2	3.6	Single	7.2	30.0	7.3	37.3	46.6	50	2	8	79	1	10
	208	18425	5.4	2.7	Single	5.4	26.0	7.3	33.3	41.6	45	2	8	88	1	10
EHIA10KN10	240	32756	9.6	4.8	Single	9.6	40.0	7.3	47.3	59.1	60	2	6	99	1	10
	208	24567	7.2	3.6	Single	7.2	34.6	7.3	41.9	52.4	60	2	6	111	1	10

Conversion: 1 foot = .305 meters

TECHNICAL DATA Three–Phase with Circuit Breaker

Heater Model	Supply Voltage	Nom. Heating BTUH	Heat KW	kW Per Element	Supply Circuit No.	Heater kW Per Circuit	Heater AMPS.	Max Motor AMPS.	FLA Total AMPS.	MCA Min Circuit Ampacity	Maximum Overcurrent Protective Device (AMPS.)	Recommended Supply Wire 75 ^{0} C. Copper # of Wires	Wire Size	Max. Length (Ft)	Ground Wire # of Wires	Min Size
EHIA10HB10	240	32756	9.6	3.2	Single	9.6	23.1	7.3	30.4	38.0	40	3	8	112	1	10
	208	24567	7.2	2.4	Single	7.2	20.0	7.3	27.3	34.1	35	3	8	125	1	10
EHIA15HB10	240	49134	14.4	4.8	Single	14.4	34.7	7.3	42.0	52.5	60	3	6	128	1	10
	208	36851	10.8	3.6	Single	10.8	30.0	7.3	37.3	46.6	50	3	8	91	1	10
EHIA20HB10	240	65513	19.2	3.2	Single	19.2	46.2	7.3	53.5	66.9	70	3	4	161	1	8
					Mult. 1	6.4	15.4	7.3	22.7	28.4	30	3	10	96	1	10
					Mult. 2	12.8	30.8	0	30.8	38.5	40	3	8	110	1	10
	208	49134	14.4	2.4	Single	14.4	40.0	7.3	47.3	59.1	60	3	6	114	1	10
					Mult. 1	4.8	13.3	7.3	20.6	25.8	30	3	10	106	1	10
					Mult. 2	9.6	26.7	0	26.7	33.3	35	3	8	127	1	10
EHIA25HB10	240	81891	24	4	Single	24	57.8	7.3	65.1	81.4	90	3	4	132	1	8
					Mult. 1	8	19.3	7.3	26.6	33.2	35	3	8	128	1	10
					Mult. 2	16	38.5	0	38.5	48.2	50	3	8	88	1	10
	208	61418	18	3	Single	18	50.0	7.3	57.3	71.7	80	3	4	150	1	8
					Mult. 1	6	16.7	7.3	24.0	30.0	30	3	10	91	1	10
					Mult. 2	12	33.3	0	33.3	41.7	45	3	8	102	1	10

Conversion: 1 foot = .305 meters

HEAT STRIP STAGING

	Single−Stage Operation (no staging − all electric heat together)	Two−Stage Capable	Three−Stage Capable (with ODTS only)
Single−Phase	EHIA05KB / KN EHIA07KB / KN EHIA10KB / KN EHIA15KB EHIA20KB EHIA25KB	EHIA15KB EHIA20KB EHIA25KB	EHIA25KB
Three−Phase	EHIA10HB EHIA15HB EHIA20HB EHIA25HB	EHIA10HB EHIA15HB EHIA20HB EHIA25HB	EHIA20HB EHIA25HB

HEATER STAGING Single−Phase

ELECTRIC HEATER	VOLTAGE	TOTAL HEAT KW		1st STAGE KW (W1)		2nd STAGE KW (W2)	
		208V	240V	208V	240V	208V	240V
EHIA05KB10	208−240/1/60	3.6	4.8	3.6	4.8	−	−
EHIA07KB10	208−240/1/60	5.4	7.2	5.4	7.2	−	−
EHIA10KB10	208−240/1/60	7.2	9.6	7.2	9.6	−	−
EHIA15KB10	208−240/1/60	10.8	14.4	7.2	9.6	3.6	4.8
EHIA20KB10	208−240/1/60	14.4	19.2	7.2	9.6	7.2	9.6
EHIA25KB10	208−240/1/60	18	24	7.2	9.6	10.8	14.4
EHIA05KN10	208−240/1/60	3.6	4.8	3.6	4.8	−	−
EHIA07KN10	208−240/1/60	5.4	7.2	5.4	7.2	−	−
EHIA10KN10	208−240/1/60	7.2	9.6	7.2	9.6	−	−

HEATER STAGING Three−Phase

ELECTRIC HEATER	VOLTAGE	TOTAL HEAT KW		1st STAGE KW (W1)		2nd STAGE KW (W2)	
		208v	240v	208v	240v	208v	240v
EHIA10HB10	208−240/3/60	7.2	9.6	7.2	9.6	−	−
EHIA15HB10	208−240/3/60	10.8	14.4	10.8	14.4	−	−
EHIA20HB10	208−240/3/60	14.4	19.2	4.8	6.4	9.6	12.8
EHIA25HB10	208−240/3/60	18	24	6	8	12	16

ACCESSORIES

Model	Description	Used with MV Model
EHIA00KN10	No Heat Kit	08, 12, 16, 20
EHIA05KB10	5 kW 1−Phase w/C.B.	08, 12, 16, 20
EHIA05KN10	5 kW 1−Phase w/T.B.	08, 12, 16, 20
EHIA07KB10	7.5 kW 1−Phase w/C.B.	08, 12, 16, 20
EHIA07KN10	7.5 kW 1−Phase w/T.B.	08, 12, 16, 20
EHIA10KB10	10 kW 1−Phase w/C.B.	08, 12, 16, 20
EHIA10KN10	10 kW 1−Phase w/T.B.	08, 12, 16, 20
EHIA15KB10	15 kW 1−Phase w/C.B.	08, 12, 16, 20
EHIA20KB10	20 kW 1−Phase w/C.B.	12, 16, 20
EHIA25KB10	25 kW 1−Phase w/C.B.	16, 20
EHIA10HB10	10 kW 3−Phase w/C.B.	12, 16, 20
EHIA15HB10	15 kW 3−Phase w/C.B.	12, 16, 20
EHIA20HB10	20 kW 3−Phase w/C.B.	16, 20
EHIA25HB10	25 kW 3−Phase w/C.B.	16, 20

KN = 1−phase T.B. = terminal block
KB = 1−phase C.B. = circuit breaker
HB = 3−phase

SINGLE POINT WIRING KIT

Model	Description	Used with Heater size
AMFK20SPA	Single Point Wiring Kit (4−pole)	15−20 kW
AMFK30SPA	Single Point Wiring Kit (6−pole)	25 kW

OUTDOOR THERMOSTAT

Model	Description	Used with Heater size
AMF002OTA	2−Stage ODTS	15 kW and above

DOWNFLOW KIT

Model	Description	Used with MV Model
AMF08DFB1	Downflow kit	08
AMF12DFB1	Downflow kit	12
AMF16DFB1	Downflow kit	16
AMF20DFB1	Downflow kit	20

International Comfort Products, LLC
Lewisburg, Tennessee 37091 U.S.A.
www.GoTempstar.com

Specifications subject to change without notice.