MV Modular
BLOWER CABINET

TEMPSTAR®
Heating and Cooling Products

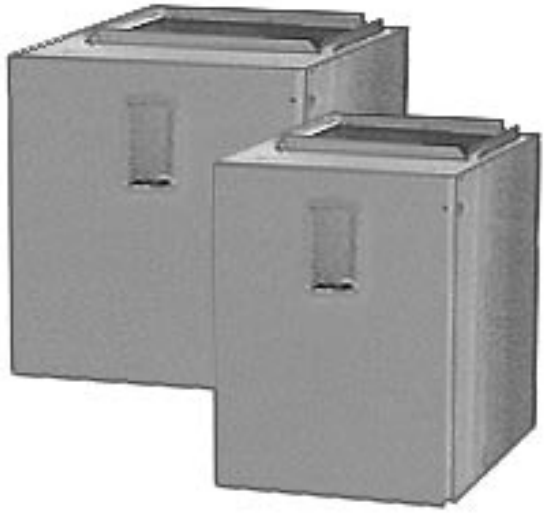

Representative photo only, some models may vary in appearance.

1 1/2 THRU 5 TONS SPLIT SYSTEM MV Series - Variable Speed

FEATURES

- Air Conditioning or Heat Pump ready
- Prepainted galvanized steel cabinet
- Internally lined with 1/2" Tuf-Skin II insulation
- Electronic control board with quick connect receptacle for electric heat*
- Direct drive slide-out blower assembly
- Variable Speed blower motor with separate controller for easy servicing
- Adjustable Blower time delay
- Efficient and Quiet Fan Only setting 60% Airflow
- Dehumidification Speed 80% Airflow
- Accepts accessory slip in electric heaters
- Accepts accessory two stage outdoor thermostats
- Flush Matches full line of Cased Coils w/ TXV
- Upflow, downflow and horizontal right or left applications

Accessory Heater

- UL listed for sale in U.S.A. and Canada
- Easy to install with simple plug in connection to Air Handler
- Designed for 208/240 Volt
- Breakerless 5, 7.5 and 10 nominal KW models available
- 5, 7.5, 10, 15, 20, 25 and 30 nominal KW models available with Circuit Breakers
- Auto reset high temperature limits

* Requires No Heat Kit if installed without electric heat

LIMITED PARTS 5 YEAR WARRANTY

MANUFACTURER CERTIFIED TO ARI AS COMPLYING WITH UNITARY AIR-CONDITIONING EQUIPMENT CERTIFICATION SECTIONS OF ARI STANDARD 210

c UL US LISTED

Rated in accordance with ARI Standard 210. Certification applies only when used with proper components as listed with ARI.

International Comfort Products Corporation (USA)
651 Heil-Quaker Ave.
Lewisburg, Tennessee 37091

RESIDENTIAL AND COMMERCIAL SYSTEMS • SPLIT SYSTEMS • PACKAGED AIR CONDITIONERS • COMBINATION GAS / ELECTRIC UNITS • HEAT PUMPS • AIR HANDLERS • MANUFACTURED HOME AIR CONDITIONERS • GAS, OIL AND ELECTRIC FURNACES

PART NO. 442 21 2302 04
March 2002
Printed in U.S.A.

SPECIFICATIONS SUBJECT TO CHANGE WITHOUT NOTICE

UNIT SPECIFICATIONS - BLOWER COILS

Model Number		MV08B1500A	MV12F1900A	MV16J2200A	MV20N2600A
Application		Upflow / Horizontal			
Electrical	Volts-Phase-Hz.	208 / 230 - 1 - 60			
Data **	Minimum Circuit Ampacity*	3.8	3.8	6.9	6.9
	Time Delay Fuse (Amps)	15			
	Maximum Fuse or Breaker Size (Amps)	15			
Blower	Size	DD10 - 7	DD10 - 8	DD10 - 9	DD10 - 9
Data	Horsepower - Speed	1/2 - VAR	1/2 - VAR	1 - VAR	1 - VAR
	Full Load Rated Amps	3.3	3.3	6.6	6.6
Transformer		40 VA			
Weight	Shipping / Net (Lbs.)	54 / 50	54 / 50	75 / 70	85 / 80

***** Disregard if electric heat is added. Refer to Electric Heat table.

UNIT SPECIFICATIONS - Using No Heat Kit

Model	Supply Circuit			Supply Circuit No.	Nominal Motor HP	Maximum Motor AMPS.	Total AMPS.	Branch Circuit Ampacity*	Maximum Overcurrent Protective Device (AMPS.)	Recommended Supply Wire 75 ^{0} C. Copper			Recommended Ground Wire	
	Volts	Phase	Hertz							No.	Size	Max. Length (Ft)	No.	Size
MV08 - 12	240	1	60	Single	1/2	3.3	3.3	3.8	15	2	14	104	1	14
	208	1	60	Single		3.3	3.3	3.8	15	2	14	90	1	14
MV16 - 20	240	1	60	Single	1	6.6	6.6	6.9	15	2	14	104	1	14
	208	1	60	Single		6.6	6.6	6.9	15	2	14	90	1	14

***** Based on maximum ampacity allowed by Magellan control program.

ACCESSORIES

Model	Description	Use With
AMFK05AHA* AMFK05AHB	5 KW Single Phase	2 - 5 Ton
AMFK07AHA* AMFK07AHB	7 1/2 KW Single Phase	2 - 5 Ton
AMFK10AHA* AMFK10AHB	10 KW Single Phase	2 - 5 Ton
AMFK14AHB	15 KW Single Phase	2 - 5 Ton
AMFK20AHB	20 KW Single Phase	3 - 5 Ton
AMFK25AHB	25 KW Single Phase	4 - 5 Ton
AMFK30AHB	30 KW Single Phase	4 - 5 Ton
AMF019DFA	Downflow Kit (Subbase)	MV12
AMF022DFA	Downflow Kit (Subbase)	MV16
AMF026DFA	Downflow Kit (Subbase)	MV20

*** AHA Models are Non-Breaker models**

ELECTRICAL HEATER DATA TABLE – Single Phase

Heater Model	Supply Voltage	Nomi-Heating BTUH	Heat-KW	KW Per Element	Supply Circuit No.	Heater KW Per Circuit	Heater AMPS.	Maxi-Motor AMPS.	Total AMP	Branch Circuit Ampacity	Maximum Overcurrent Protective Device (AMPS.)	Recommended Supply Wire 75 ^{0} C. Copper No.	Size	Max. Length (Ft	Ground Wire No.	Size
AMFK05AH	240	16,832	4.8	4.8	Single	4.8	20.0	6.0	26.0	32.5	35	2	10	61	1	10
	208	12,287	3.6	3.6	Single	3.6	17.3	6.0	23.3	29.2	30	2	10	59	1	10
AMFK07AH	240	24573	7.2	3.6	Single	7.2	30.0	6.0	36.0	45.0	45	2	8	70	1	10
	208	18430	5.4	2.7	Single	5.4	26.0	6.0	32.0	40.0	40	2	8	68	1	10
AMFK10AH	240	32,765	9.6	4.8	Single	9.6	40.0	6.0	46.0	57.5	60	2	6	85	1	10
	208	24,574	7.2	3.6	Single	7.2	34.7	6.0	40.7	50.8	60	2	6	83	1	10
AMFK14AH	240	49,147	14.4	4.8	Single	14.4	60.0	6.0	66.0	82.5	90	2	4	94	1	8
					Mult. 1	9.6	40.0	6.0	46.0	57.5	60	2	6	50	1	10
					Mult. 2	4.8	20.0	0.0	20.0	25.0	25	2	12		1	10
	208	36,860	10.8	3.6	Single	10.8	52.0	6.0	58.0	72.5	80	2	4	93	1	8
					Mult. 1	7.2	34.7	6.0	40.7	50.8	60	2	6	50	1	10
					Mult. 2	3.6	17.3	0.0	17.3	21.7	25	2	12		1	10
AMFK20AH	240	65,530	19.2	4.8	Single	19.2	80.0	6.0	86.0	107.5	110	2	2	115	1	6
					Mult. 1	9.6	40.0	6.0	46.0	57.5	60	2	6	63	1	10
					Mult. 2	9.6	40.0	0.0	40.0	50.0	50	2	8		1	10
	208	49,147	14.4	3.6	Single	14.4	69.3	6.0	75.3	94.2	100	2	3	90	1	8
					Mult. 1	7.2	34.7	6.0	40.7	50.8	60	2	6	63	1	10
					Mult. 2	7.2	34.7	0.0	34.7	43.3	45	2	8		1	10
AMFK25AH	240	81912	24.0	4.8	Single	24.0	100.0	6.0	106.0	132.5	150	2	1 / 0	148	1	6
					Mult. 1	9.6	40.0	6.0	46.0	57.5	60	2	6	50	1	10
					Mult. 2	9.6	40.0	0.0	40.0	50.0	50	2	8		1	10
					Mult. 3	4.8	20.0	0.0	20.0	25.0	25	2	12		1	10
	208	61,434	18.0	3.6	Single	18.0	75.1	6.0	81.1	101.4	110	2	2	106	1	6
					Mult. 1	7.2	34.7	6.0	40.7	50.8	60	2	6	50	1	10
					Mult. 2	7.2	34.7	0.0	34.7	43.3	45	2	8		1	10
					Mult. 3	3.6	17.3	0.0	17.3	21.7	25	2	12		1	10
AMFK30AH	240	98,294	28.8	4.8	Single	28.8	120.0	6.0	126.0	157.5	175	2	2 / 0	158	1	6
					Mult. 1	9.6	40.0	6.0	46.0	57.5	60	2	6	63	1	10
					Mult. 2	9.6	40.0	0.0	40.0	50.0	50	2	8		1	10
					Mult. 3	9.6	40.0	0.0	40.0	50.0	50	2	8		1	10
	208	73,721	21.6	3.6	Single	21.6	90.1	6.0	96.1	120.2	125	2	1	112	1	6
					Mult. 1	7.2	34.7	6.0	40.7	50.8	60	2	6	63	1	10
					Mult. 2	7.2	34.7	0.0	34.7	43.3	45	2	8		1	10
					Mult. 3	7.2	34.7	0.0	34.7	43.3	45	2	8		1	10

MODEL NUMBER IDENTIFICATION

M V 12 F19 00 A

PRODUCT FAMILY

MV = MODULAR VARIABLE SPEED BLOWER

NOMINAL CFM RANGE

08 = 800
12 = 1200
16 = 1600
20 = 2000

COIL WIDTH MATCH

FIELD INSTALLED HEATERS

SALES CODE

ACCESSORY MODEL GUIDE

A M F 001 DP A

PRODUCT GROUP

A = Accessories

PRODUCT TYPE

C = Cooling H = Heating X = Special
M = Multi Use (Heating and / or Cooling)

SERIES

PRODUCT IDENTIFIER NUMBER

PRODUCT IDENTIFIER

SALES CODE

ACCESSORY PRODUCT IDENTIFIER ASSIGNMENT

AH – Auxiliary Heater
OT – Outdoor Thermostat
WF – Washable Filter
SP – Single Point Wiring Kit
DP – Drain Pan Kit
NH – No Heat Kit
TK – Thermostatic Expansion Valve

BLOWER CURVES Vs ESP & Speed Tap

Dip Switch Settings - 000 Highest Speed 111 Lowest Speed

MV08B1500A

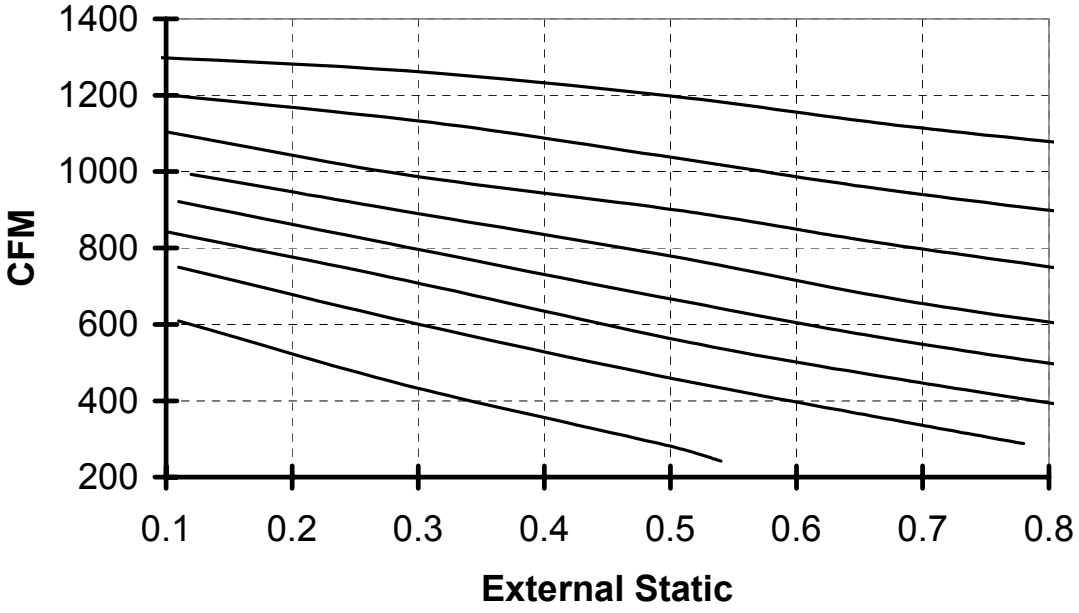

MV12F1900 Airflow

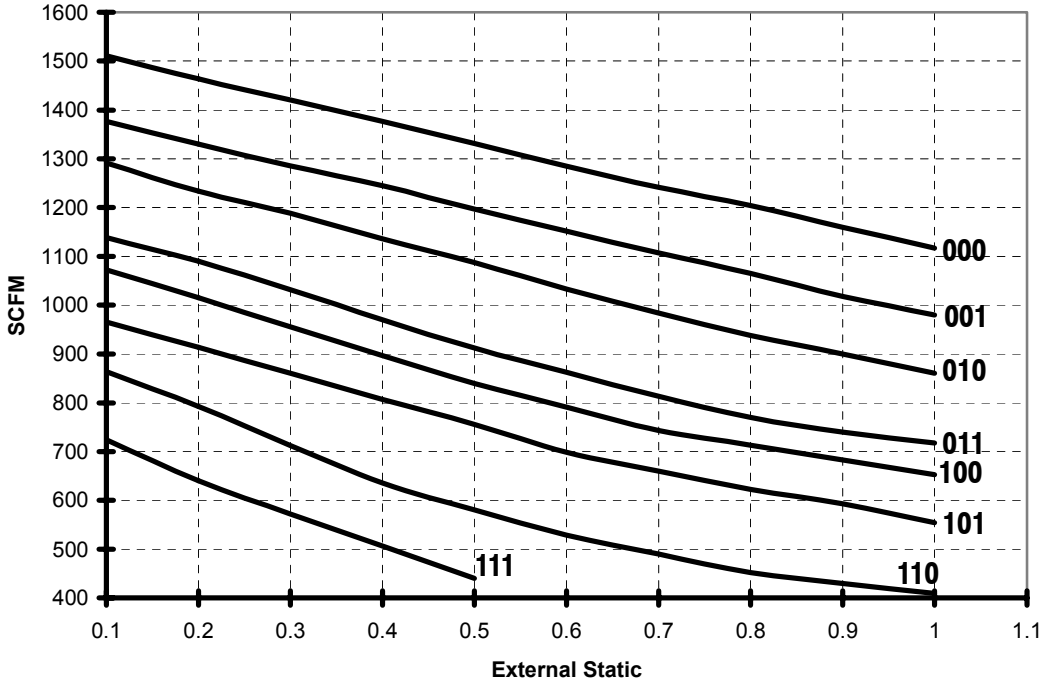

BLOWER CURVES Vs ESP & Speed Tap

Dip Switch Settings - 000 Highest Speed 111 Lowest Speed

MV16J2200 Airflow

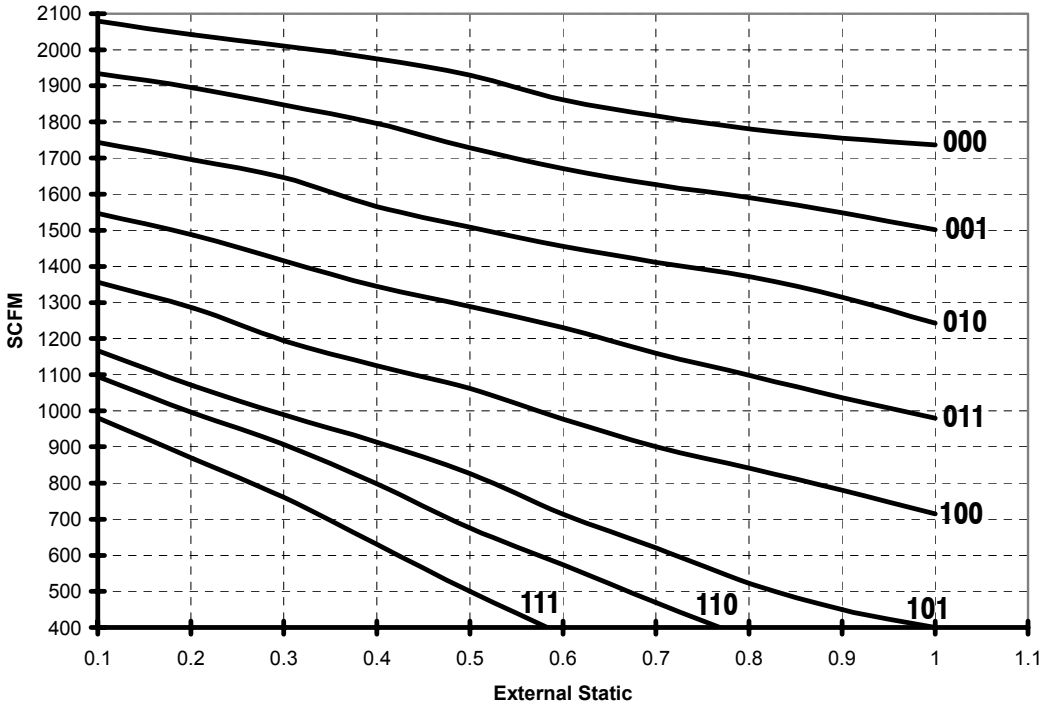

MV20N2600 Airflow

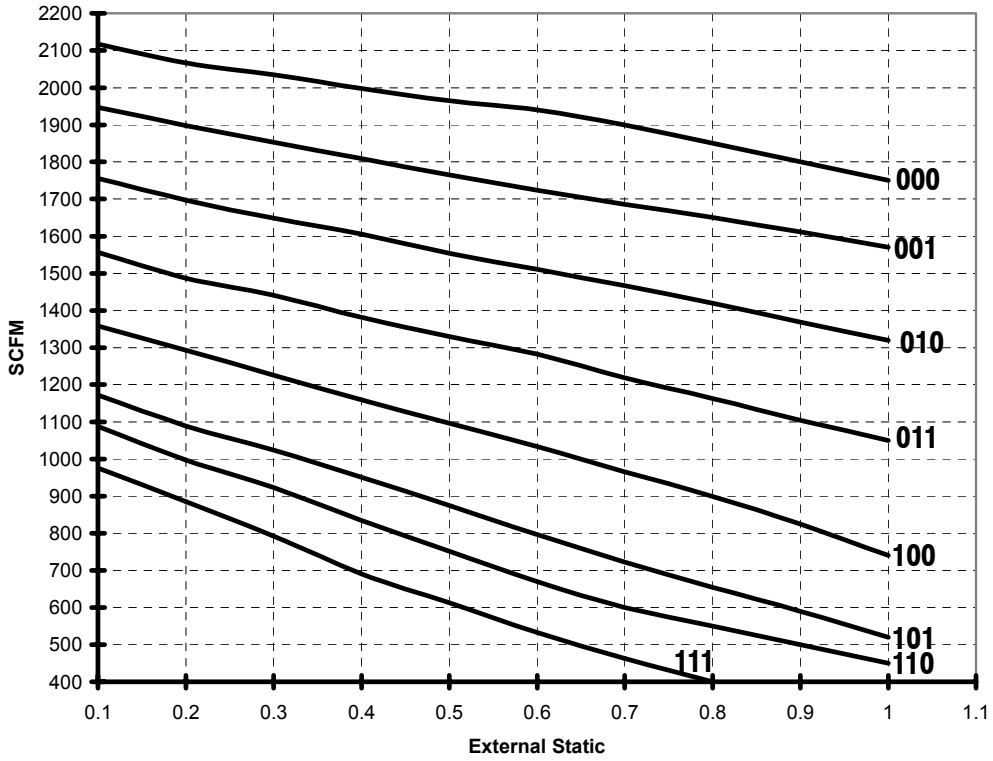

HEATER STATIC TABLE

CFM	HEATER KW / STATIC DROP						
	5	7.5	10	15	20	25	30
600	.01	.01	.01				
800	.01	.01	.01	.01			
1000	.01	.01	.01	.01	.02		
1100	.01	.01	.01	.02	.02		
1200	.01	.01	.01	.02	.02		
1300	.01	.02	.02	.02	.02		
1400	.01	.02	.02	.02	.03	.03	
1500	.01	.02	.02	.02	.03	.04	
1600	.01	.02	.02	.03	.03	.04	.04
1700	.01	.02	.02	.03	.03	.04	.05
1800	.01	.02	.02	.03	.04	.04	.05
1900	.01	.02	.02	.03	.04	.05	.06
2000	.01	.02	.02	.03	.04	.05	.06
	DO NOT OPERATE IN THIS AREA CFM / KW LIMIT EXCEEDED						

Deduct heater static shown in heater static table.

HEATER STAGING

HEATER MODEL	VOLTAGE	TOTAL HEAT		1st STAGE (W1)		2nd STAGE (W2)	
		208V	240V	208V	240V	208V	240V
AMFK05AH	208-240/1/60	3.6	4.8	3.6	4.8	-	-
AMFK07AH	208-240/1/60	5.4	7.2	2.7	3.6	2.7	3.6
AMFK10AH	208-240/1/60	7.2	9.6	3.6	4.8	3.6	4.8
AMFK14AH	208-240/1/60	10.8	14.4	7.2	9.6	3.6	4.8
AMFK20AH	208-240/1/60	14.4	19.2	7.2	9.6	7.2	9.6
AMFK25AH	208-240/1/60	18.0	24.0	7.2	9.6	10.8	14.4
AMFK30AH	208-240/1/60	21.6	28.8	7.2	9.6	14.4	19.2

DIMENSIONS

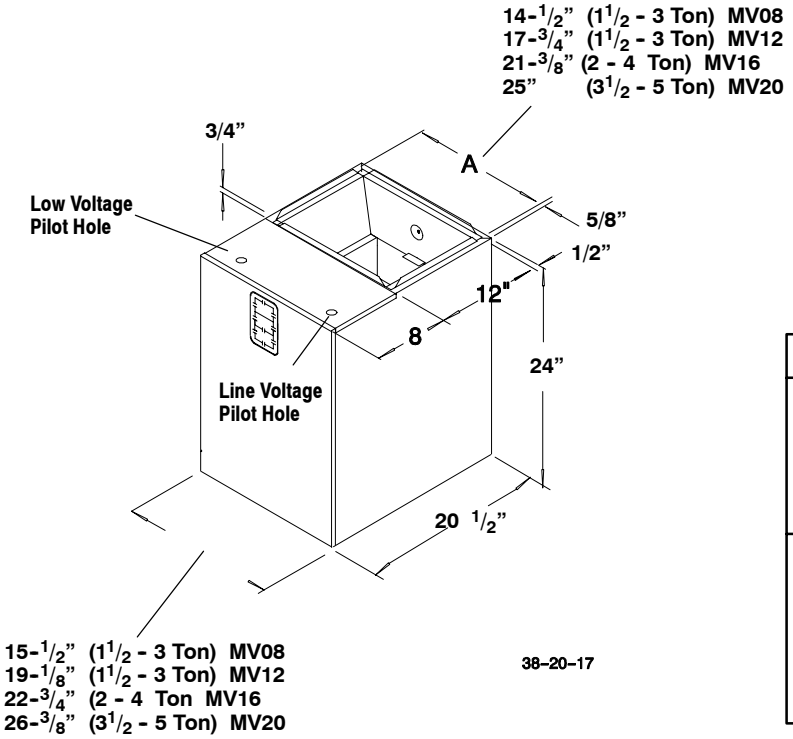

Bottom Return Air Opening
14-3/8" x 20" MV08
18" x 20" MV12
21-5/8" x 20" MV16
25-1/4" x 20 MV20

CLEARANCES

NO HEATERS
All Sides ..... 0"
From Supply Duct ..... 0"
Recommended Service From Front ..... 20"
(Service for blower, filter if installed)

WITH HEATERS
All Sides ..... 0"
From First Three
Feet of Supply Duct to Combustibles ..... 1"
From Duct after Three Feet ..... 0"
Recommended Service From Front ..... 20"
(Service for blower, filter, heaters if installed)