EV BLOWER COILS

TEMPSTAR®
Heating and Cooling Products

Representative photo only, some models may vary in appearance.

1 1/2 THRU 5 TONS SPLIT SYSTEM
EV Series - Variable Speed

FEATURES

- Air Conditioning or Heat Pump ready
- Prepainted galvanized steel cabinet
- Internally lined with R4.2, 1" Tuf-Skin II insulation
- Electronic control board with quick connect receptable for electric heat
- Direct drive slide-out blower assembly
- Variable Speed blower motor
- Adjustable Blower time delay
- Efficient and Quiet Fan Only setting 60% Airflow
- Dehumidification Speed 80% Airflow
- Accepts accessory slip in electric heaters
- Accepts accessory two stage outdoor thermostats
- Matches full line of Cased Coils w/ TXV
- Upflow, downflow and horizontal right or left applications

Accessory Heater

- UL listed for sale in U.S.A. and Canada
- Easy to install with simple plug in connection to Air Handler
- Designed for 208/240 Volt
- 5, 7.5 and 10 nominal KW models available with lug terminals
- 5, 7.5, 10, 15, 20, 25 and 30 nominal KW models available with Circuit Breakers
- Auto reset high temperature limits

LIMITED PARTS 5 YEAR WARRANTY

C UL

Listed By Underwriters' Laboratories

442 21 2301 01

UNIT SPECIFICATIONS - BLOWERS

Model Number		EV12F1900A	EV16J2200A	EV20N2600A
Application		Upflow / Horizontal		
Electrical Data **	Volts-Phase-Hz.	208 / 230 - 1 - 60		
	Minimum Circuit Ampacity*	7.5	7.5	7.5
	Time Delay Fuse (Amps)	15		
	Maximum Fuse or Breaker Size (Amps)	15		
Blower Data	Size	DD10 - 8	DD10 - 9	DD10 - 9
	Horsepower - Speed	1/2 - VAR	1/2 - VAR	1 - VAR
	Full Load Rated Amps	5.0	5.0	4.4
Transformer		40 VA		
Weight	Shipping / Net (Lbs.)	---	--	---

* Disregard if electric heat is added. Refer to Electric Heat table.

ELECTRICAL HEATER DATA TABLE: (Single Phase)

Heater Model	Supply Voltage	Nomi-Heating BTUH	Heat-KW	KW Per Element	Supply Circuit No.	Heater KW Per Circuit	Heater AMPS.	Maxi-Motor AMPS.	Total AMP	Branch Circuit Ampacity	Maximum Overcurrent Protective Device (AMPS.)	Recommended Supply Wire 75 ^{0} C. Copper No.	Size	Max. Length (F	Ground Wire No.	Siz
AMFK05AH	240	16,832	4.8	4.8	Single	4.8	20.0	6.0	26.0	32.5	35	2	10	61	1	10
	208	12,287	3.6	3.6	Single	3.6	17.3	6.0	23.3	29.2	30	2	10	59	1	10
AMFK07AH	240	24573	7.2	3.6	Single	7.2	30.0	6.0	36.0	45.0	45	2	8	70	1	10
	208	18430	5.4	2.7	Single	5.4	26.0	6.0	32.0	40.0	40	2	8	68	1	10
AMFK10AH	240	32,765	9.6	4.8	Single	9.6	40.0	6.0	46.0	57.5	60	2	6	85	1	10
	208	24,574	7.2	3.6	Single	7.2	34.7	6.0	40.7	50.8	60	2	6	83	1	10
AMFK14AH AMFK15AH	240	49,147	14.4	4.8	Single	14.4	60.0	6.0	66.0	82.5	90	2	4	94	1	8
					Mult. 1	9.6	40.0	6.0	46.0	57.5	60	2	6	50	1	10
					Mult. 2	4.8	20.0	0.0	20.0	25.0	25	2	12		1	10
	208	36,860	10.8	3.6	Single	10.8	52.0	6.0	58.0	72.5	80	2	4	93	1	8
					Mult. 1	7.2	34.7	6.0	40.7	50.8	60	2	6	50	1	10
					Mult. 2	3.6	17.3	0.0	17.3	21.7	25	2	12		1	10
AMFK20AH	240	65,530	19.2	4.8	Single	19.2	80.0	6.0	86.0	107.5	110	2	2	115	1	6
					Mult. 1	9.6	40.0	6.0	46.0	57.5	60	2	6	63	1	10
					Mult. 2	9.6	40.0	0.0	40.0	50.0	50	2	8		1	10
	208	49,147	14.4	3.6	Single	14.4	69.3	6.0	75.3	94.2	100	2	3	90	1	8
					Mult. 1	7.2	34.7	6.0	40.7	50.8	60	2	6	63	1	10
					Mult. 2	7.2	34.7	0.0	34.7	43.3	45	2	8		1	10
AMFK25AH	240	81912	24.0	4.8	Single	24.0	100.0	6.0	106.0	132.5	150	2	1 / 0	148	1	6
					Mult. 1	9.6	40.0	6.0	46.0	57.5	60	2	6	50	1	10
					Mult. 2	9.6	40.0	0.0	40.0	50.0	50	2	8		1	10
					Mult. 3	4.8	20.0	0.0	20.0	25.0	25	2	12		1	10
	208	61,434	18.0	3.6	Single	18.0	75.1	6.0	81.1	101.4	110	2	2	106	1	6
					Mult. 1	7.2	34.7	6.0	40.7	50.8	60	2	6	50	1	10
					Mult. 2	7.2	34.7	0.0	34.7	43.3	45	2	8		1	10
					Mult. 3	3.6	17.3	0.0	17.3	21.7	25	2	12		1	10
AMFK30AH	240	98,294	28.8	4.8	Single	28.8	120.0	6.0	126.0	157.5	175	2	2 / 0	158	1	6
					Mult. 1	9.6	40.0	6.0	46.0	57.5	60	2	6	63	1	10
					Mult. 2	9.6	40.0	0.0	40.0	50.0	50	2	8		1	10
					Mult. 3	9.6	40.0	0.0	40.0	50.0	50	2	8		1	10
	208	73,721	21.6	3.6	Single	21.6	90.1	6.0	96.1	120.2	125	2	1	112	1	6
					Mult. 1	7.2	34.7	6.0	40.7	50.8	60	2	6	63	1	10
					Mult. 2	7.2	34.7	0.0	34.7	43.3	45	2	8		1	10
					Mult. 3	7.2	34.7	0.0	34.7	43.3	45	2	8		1	10

EV12F1900 Airflow

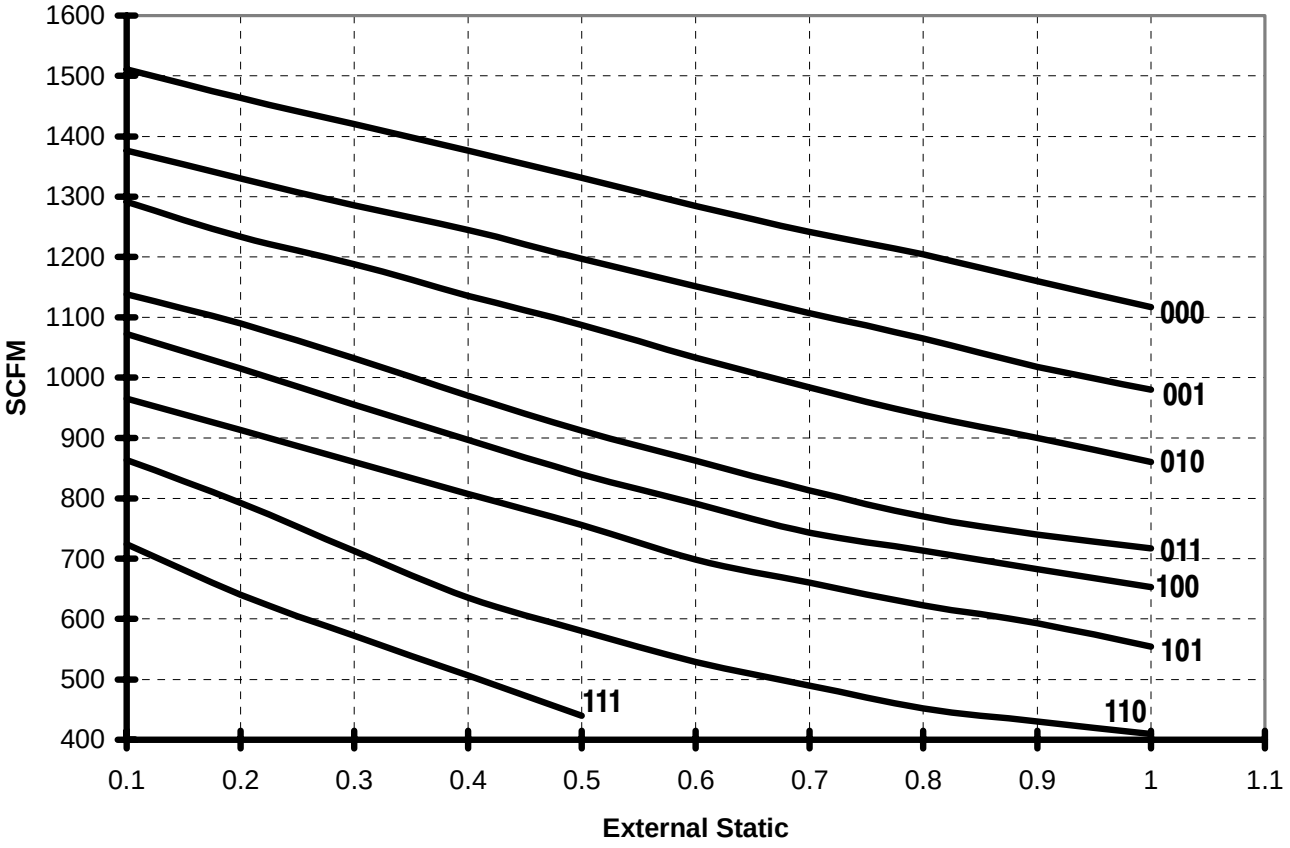

Dip Switch Settings

000 Highest Speed
111 Lowest Speed

EV16J2200 Airflow

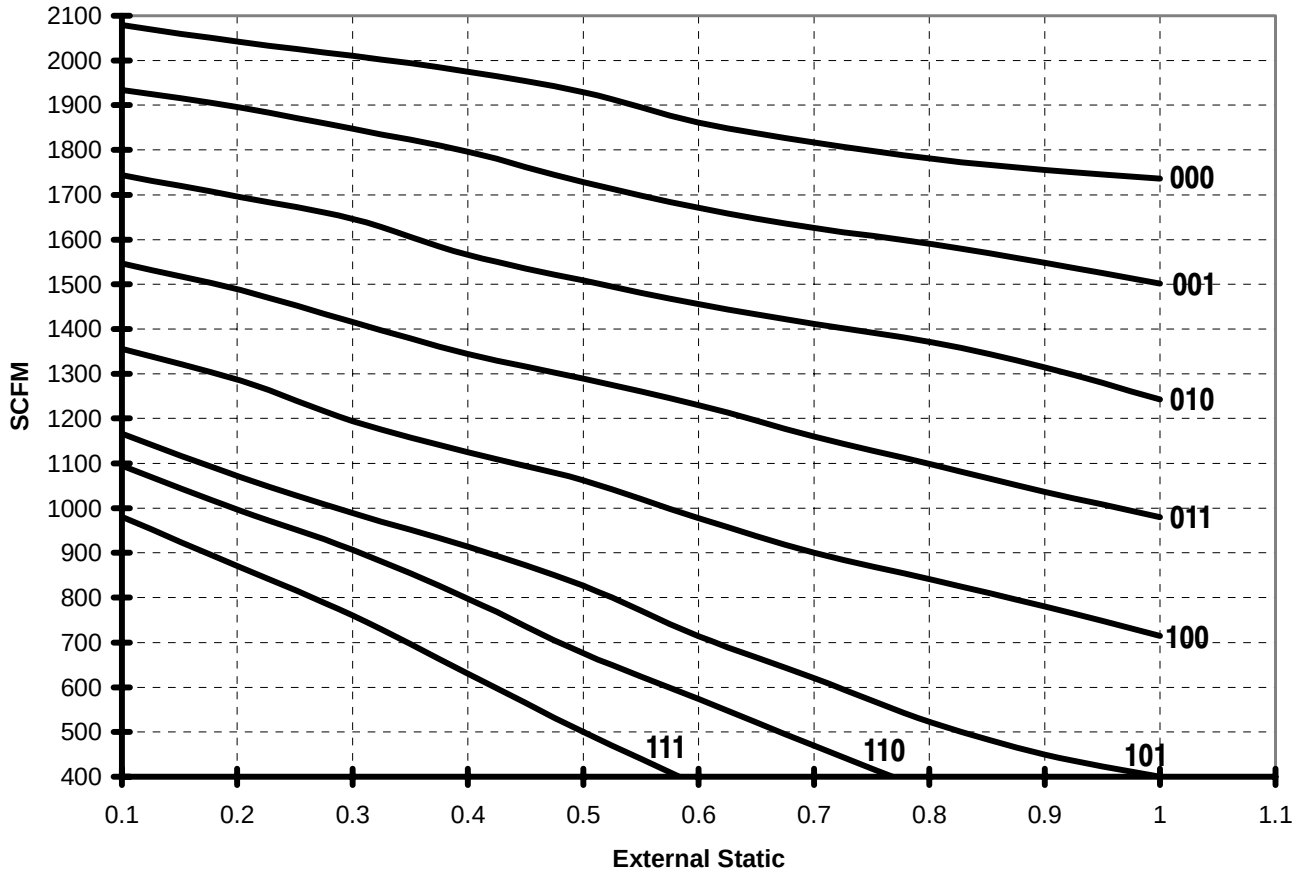

Dip Switch Settings

000 Highest Speed
111 Lowest Speed

EV20N2600 Airflow

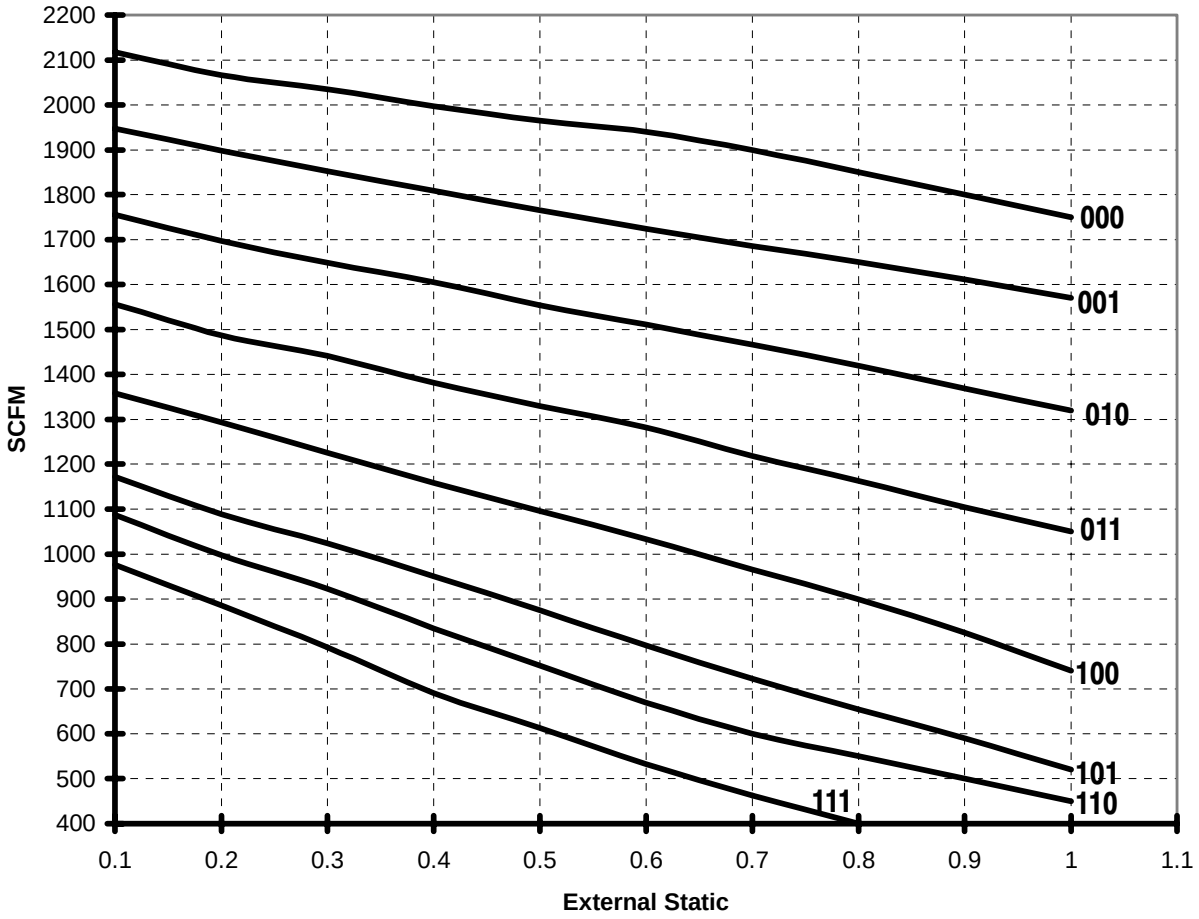

Dip Switch Settings

000 Highest Speed
111 Lowest Speed

HEATER STATIC TABLE

CFM	HEATER KW / STATIC DROP						
	5	7.5	10	15	20	25	30
600	.01	.01	.01				
800	.01	.01	.01	.01			
1000	.01	.01	.01	.01	.02		
1100	.01	.01	.01	.02	.02		
1200	.01	.01	.01	.02	.02		
1300	.01	.02	.02	.02	.02		
1400	.01	.02	.02	.02	.03	.03	
1500	.01	.02	.02	.02	.03	.04	
1600	.01	.02	.02	.03	.03	.04	.04
1700	.01	.02	.02	.03	.03	.04	.05
1800	.01	.02	.02	.03	.04	.04	.05
1900	.01	.02	.02	.03	.04	.05	.06
2000	.01	.02	.02	.03	.04	.05	.06
	DO NOT OPERATE IN THIS AREA CFM / KW LIMIT EXCEEDED						

Deduct heater static shown in heater static table.

HEATER STAGING

HEATER MODEL	VOLTAGE	TOTAL HEAT		1st STAGE (W1)		2nd STAGE (W2)	
		208V	240V	208V	240V	208V	240V
AMFK05AH	208-240/1/60	3.6	4.8	3.6	4.8	-	-
AMFK07AH	208-240/1/60	5.4	7.2	2.7	3.6	2.7	3.6
AMFK10AH	208-240/1/60	7.2	9.6	3.6	4.8	3.6	4.8
AMFK14AH / AMFK15AH	208-240/1/60	10.8	14.4	7.2	9.6	3.6	4.8
AMFK20AH	208-240/1/60	14.4	19.2	7.2	9.6	7.2	9.6
AMFK25AH	208-240/1/60	18.0	24.0	7.2	9.6	10.8	14.4
AMFK30AH	208-240/1/60	21.6	28.8	7.2	9.6	14.4	19.2

ACCESSORIES

Model	Description	Use With
AMFK05AHA* AMFK05AHB	5 KW Single Phase	2 - 5 Ton
AMFK07AHA* AMFK07AHB	7 1/2 KW Single Phase	2 - 5 Ton
AMFK10AHA* AMFK10AHB	10 KW Single Phase	2 - 5 Ton
AMFK14AHB	15 KW Single Phase	2 - 2 1/2 Ton
AMFK15AHB	15 KW Single Phase	3 - 5 Ton
AMFK20AHB	20 KW Single Phase	3 - 5 Ton
AMFK25AHB	25 KW Single Phase	4 - 5 Ton
AMFK30AHB	30 KW Single Phase	4 - 5 Ton
AMF019DFA	Downflow Kit (Subbase)	EV12
AMF022DFA	Downflow Kit (Subbase)	EV16
AMF026DFA	Downflow Kit (Subbase)	EV20

*** AHA Models are Non-Breaker models**

NOTES

MODEL NUMBER IDENTIFICATION GUIDE

E	V	12	F19	00	A

PRODUCT FAMILY

EV = VARIABLE SPEED BLOWER

SALES CODE

FIELD INSTALLED HEATERS

NOMINAL CFM RANGE
12 = 1200
16 = 1600
20 = 2000

COIL WIDTH MATCH

ACCESSORIES NUMBER IDENTIFICATION GUIDE

A	M	F	001	DP	A

PRODUCT GROUP

A = Accessories

SALES CODE

PRODUCT IDENTIFIER

PRODUCT TYPE

C = Cooling H = Heating X = Special
M = Multi Use (Heating and / or Cooling)

PRODUCT IDENTIFIER NUMBER

SERIES

ACCESSORY PRODUCT IDENTIFIER ASSIGNMENT

AH - Auxiliary Heater	DP - Drain Pan Kit
OT - Outdoor Thermostat	
WF - Washable Filter	NH - No Heat Kit
SP - Single Point Wiring Kit	TK - Thermostatic Expansion Valve

DIMENSIONS

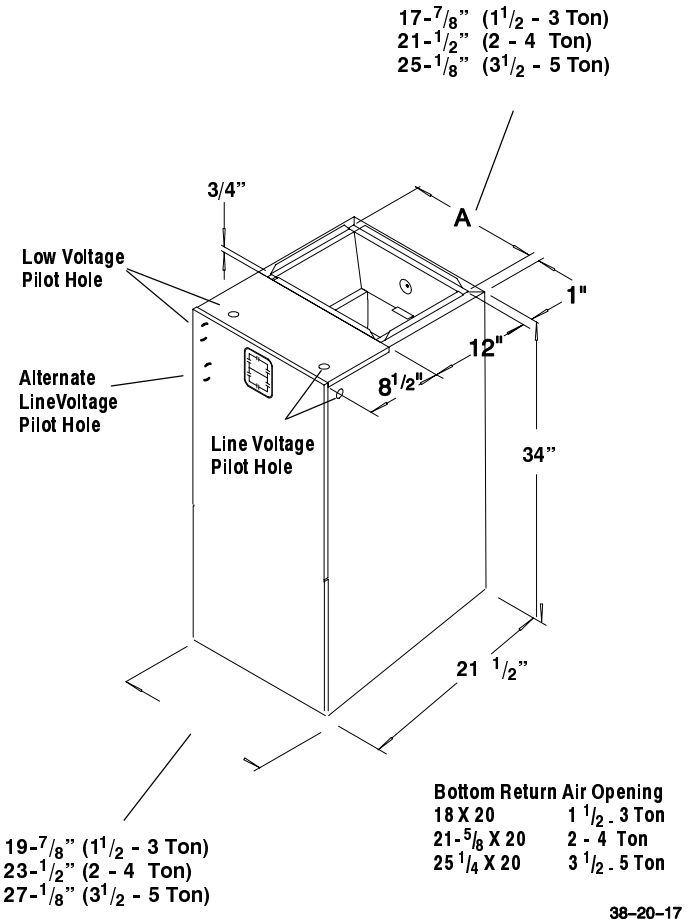

Bottom Return Air Opening

18 X 20	1 1/2 - 3 Ton
21-5/8 X 20	2 - 4 Ton
25 1/4 X 20	3 1/2 - 5 Ton

38–20–17

CLEARANCES

NO HEATERS
All Sides ..... 0"
From Supply Duct ..... 0"
Recommended Service From Front ..... 20"
(Service for blower, filter if installed)

WITH HEATERS
All Sides ..... 0"
From First Three
Feet of Supply Duct to Combustibles ..... 1"
From Duct after Three Feet ..... 0"
Recommended Service From Front ..... 20"
(Service for blower, filter, heaters if installed)

TEMPSTAR®
Heating and Cooling Products

International Comfort Products Corporation (USA)
650 Heil Quaker Avenue
Lewisburg, Tn. 37091

RESIDENTIAL AND COMMERCIAL SYSTEMS • SPLIT SYSTEMS • PACKAGED AIR CONDITIONERS
COMBINATION GAS / ELECTRIC UNITS • HEAT PUMPS • AIR HANDLERS
MANUFACTURED HOME AIR CONDITIONERS • GAS, OIL AND ELECTRIC FURNACES

Printed in U.S.A.

PART NO. 442 21 2301 01
7-99

SPECIFICATION SUBJECT TO CHANGE WITHOUT NOTICE