ELECTRIC FURNACE

TEMPSTAR®
Heating and Cooling Products

Representative photo only, some models may vary in appearance.

2 THRU 5 TONS SPLIT SYSTEM
EF Series

FEATURES

- Electric Furnace, Air Conditioning or Heat Pump ready
- Upflow or horizontal left or right airflow as shipped. (Horizontal Drain Pan Accessory required if used with a coil in horizontal position)
- Downflow applications require Subbase Accessory
- Prepainted galvanized steel cabinet
- Internally lined with R4.2, 1" Tuf-Skin II insulation
- Electronic control board with quick connect receptable for electric heat
- Direct drive slide-out blower assembly
- Three speed PSC blower motor
- Accepts EPA and EXA Series of A-coils
- Multiple condensate drain provisions, allow choice of location for primary and secondary connections
- Accepts accessory slip-in electric heaters
- Accepts accessory two stage outdoor thermostats

Accessory Heater

- UL listed for sale in U.S.A. and Canada
- Easy to install with simple plug in connection to Electric Furnace
- Designed for 208/240 Volt
- Single & Three phase models
- 5, 7.5 and 10 nominal KW models available with lug terminals
- 5, 7.5, 10, 15, 20, 25 and 30 nominal KW models available with Circuit Breakers
- Auto-reset high temperature limits

LIMITED PARTS 5 YEAR WARRANTY

UL® c UL®

Listed By
Underwriters'
Laboratories

442 21 2201 03
June 2002

UNIT SPECIFICATIONS - ELECTRIC FURNACE

Model Number		EF08B1500A	EF12F1900A	EF16J2200A	EF20N2600A
Application		Upflow / Horizontal / Downflow *			
Electrical	Volts-Phase-Hz.	208 / 230 - 1 - 60			
Data **	Minimum Circuit Ampacity	7.5	7.5	7.5	7.5
	Time Delay Fuse (Amps)	15			
	Maximum Fuse or Breaker Size (Amps)	15			
Blower	Size	DD10 - 7	DD10 - 8	DD10 - 9	DD10 - 9
Data	Horsepower - Speed	1/3 - 3	1/2 - 3	1/2 - 3	3/4 - 3
	Full Load / Lock Rotor Amps	2.2 / 4.1	4.0 / 6.8	4.0 / 6.8	6.0 / 13.2
Transformer		40 VA			
Washable Air Filter Size, I" Thick (In.) (Field Supplied)		14-1/4 X 20-1/4	17-3/4 X 20-1/4	21-1/4 X 20-1/4	24-3/4 X 20-1/4
Disposable Air Filter Size, I" Thick (In.) (Field Supplied)		14 X 20	18 X 20	20 X 20	25 X 20
Weight	Shipping / Net (Lbs.)	54 / 50	54 / 50	75 / 70	85 / 80

* Kit required for Accessory Subbase ** Disregard if electric heat is added. Refer to Electric Heat table.

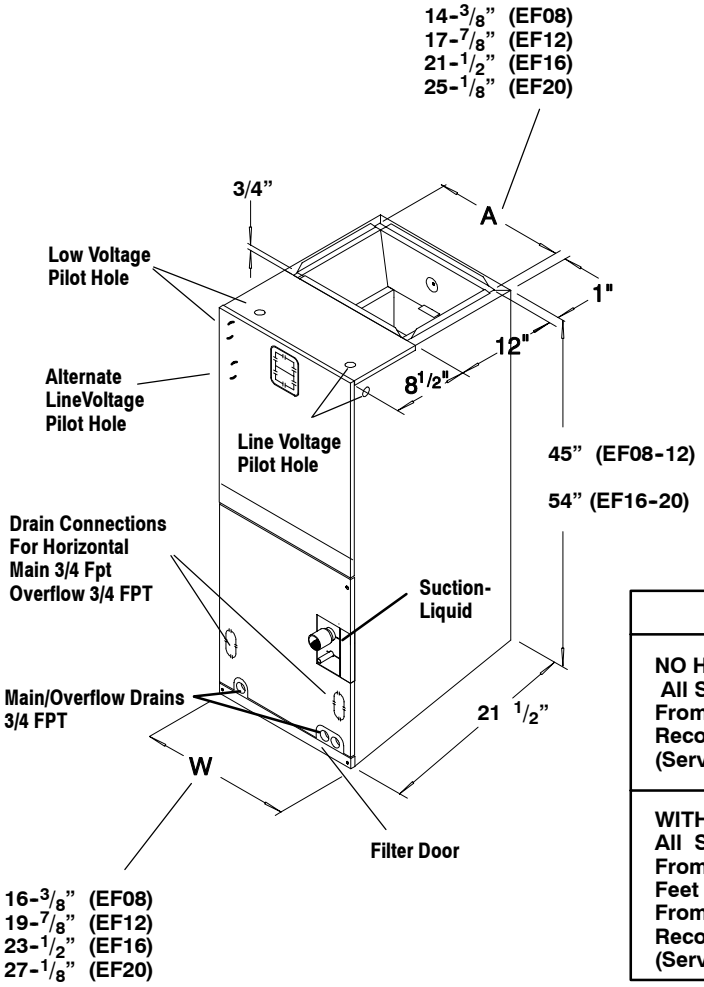

38-20-17

CLEARANCES

NO HEATERS
All Sides ..... 0"
From Supply Duct ..... 0"
Recommended Service From Front ..... 20"
(Service for blower, filter if installed)

WITH HEATERS
All Sides ..... 0"
From First Three
Feet of Supply Duct to Combustibles ..... 1"
From Duct after Three Feet ..... 0"
Recommended Service From Front ..... 20"
(Service for blower, filter, heaters if installed)

Airflow Based on no coil, no filter, no electric heat. Deduct heater static shown in heater static table. Deduct filter static shown in filter static table. Deduct coil static, See Coil Specification Sheet. Deduct .10 for Horizontal Drain Pan Kit. Deduct .20 for Downflow Subbase Kit.

EF08		SP IN. WG.							
SPEED	Volts	0.3	0.4	0.5	0.6	0.7	0.8	0.9	1.0
LOW	230V	1053	1013	965	911	856	761	654	552
	208V	863	827	788	725	641	568	492	381
MED	230V	1333	1281	1221	1150	1060	990	857	743
	208V	1156	1115	1059	997	941	853	738	618
HIGH	230V	1553	1486	1411	1328	1227	1106	1032	865
	208V	1394	1336	1272	1195	1096	1023	924	774

EF16		SP IN. WG.							
SPEED	Volts	0.3	0.4	0.5	0.6	0.7	0.8	0.9	1.0
LOW	230V	1103	1088	1067	1040	994	921	849	749
	208V	872	847	820	788	750	696	630	530
MED	230V	1500	1493	1470	1438	1383	1303	1143	993
	208V	1229	1223	1198	1169	1123	1031	926	798
HIGH	230V	1912	1879	1830	1771	1684	1577	1429	1154
	208V	1629	1609	1584	1545	1478	1393	1214	1058

EF12		SP IN. WG.							
SPEED	Volts	0.3	0.4	0.5	0.6	0.7	0.8	0.9	1.0
LOW	230V	1103	1092	1086	1060	1024	973	906	803
	208V	903	893	877	858	830	781	728	642
MED	230V	1498	1473	1451	1409	1352	1277	1173	1044
	208V	1246	1239	1222	1202	1160	1098	1014	906
HIGH	230V	1860	1815	1760	1685	1596	1491	1352	1178
	208V	1602	1584	1553	1501	1432	1347	1241	1096

EF20		SP IN. WG.							
SPEED	Volts	0.3	0.4	0.5	0.6	0.7	0.8	0.9	1.0
LOW	230V	1673	1670	1669	1643	1587	1461	1298	1081
	208V	1320	1306	1289	1237	1147	1006	810	576
MED	230V	2060	2030	1980	1912	1835	1723	1594	1444
	208V	1676	1656	1613	1531	1381	1201	986	683
HIGH	230V	2554	2459	2352	2242	2116	1966	1809	1606
	208V	2420	2334	2244	2137	2021	1875	1732	1558

FILTER STATIC PRESSURE DROP

MODEL	*WASHABLE FILTER SIZE	DISPOSABLE FILTER SIZE	CFM							
			600	800	1000	1200	1400	1600	1800	2000
EF08	14 1/4 X 20 1/4	14 X 20	0.05	0.09	0.13	0.19	---	---	---	---
EF12	17 3/4 X 20 1/4	18 X 20	----	----	0.09	0.12	0.17	0.22	---	---
EF16	21 1/4 X 20 1/4	20 X 20	----	----	---	---	0.12	0.15	0.19	---
EF20	24 3/4 X 20 1/4	25 X 20	----	----	---	---	0.09	0.11	0.14	0.18

HEATER STATIC TABLE

CFM	HEATER KW / STATIC DROP						
	5	7.5	10	15	20	25	30
600	.01	.01	.01				
800	.01	.01	.01	.01			
1000	.01	.01	.01	.01	.02		
1100	.01	.01	.01	.02	.02		
1200	.01	.01	.01	.02	.02		
1300	.01	.02	.02	.02	.02		
1400	.01	.02	.02	.02	.03	.03	
1500	.01	.02	.02	.02	.03	.04	
1600	.01	.02	.02	.03	.03	.04	.04
1700	.01	.02	.02	.03	.03	.04	.05
1800	.01	.02	.02	.03	.04	.04	.05
1900	.01	.02	.02	.03	.04	.05	.06
2000	.01	.02	.02	.03	.04	.05	.06
	DO NOT OPERATE IN THIS AREA CFM / KW LIMIT EXCEEDED						

Deduct heater static shown in heater static table. See Airflow next page.

UNIT SPECIFICATIONS - No Heat Kit

No Heat Model	Supply Circuit			Supply Circuit No.	Maximum Motor AMPS.	Total AMPS.	Branch Circuit Ampacity	Maximum Overcurrent Protective Device (AMPS.)	Recommended Supply Wire 75 0 C. Copper			Ground Wire	
	Volts	Phase	Hertz						No.	Size	Max. Length (Ft)	No.	Size
AMF001NH	240	1	60	Single	6.0	6.0	7.5	15	2	14	104	1	14
	208	1	60	Single	6.0	6.0	7.5	15	2	14	90	1	14

ELECTRICAL HEATER DATA TABLE: (Single Phase)

Heater Model	Supply Voltage	Nomi-Heating BTUH	Heat-KW	KW Per Element	Supply Circuit No.	Heater KW Per Circuit	Heater AMPS.	Maxi-Motor AMPS.	Total AMP	Branch Circuit Ampacity	Maximum Overcurrent Protective Device (AMPS.)	Recommended Supply Wire 75 ^{0} C. Copper No.	Size	Max. Length (F	Ground Wire No.	Siz
AMFK05AH	240	16,832	4.8	4.8	Single	4.8	20.0	6.0	26.0	32.5	35	2	10	61	1	10
	208	12,287	3.6	3.6	Single	3.6	17.3	6.0	23.3	29.2	30	2	10	59	1	10
AMFK07AH	240	24573	7.2	3.6	Single	7.2	30.0	6.0	36.0	45.0	45	2	8	70	1	10
	208	18430	5.4	2.7	Single	5.4	26.0	6.0	32.0	40.0	40	2	8	68	1	10
AMFK10AH	240	32,765	9.6	4.8	Single	9.6	40.0	6.0	46.0	57.5	60	2	6	85	1	10
	208	24,574	7.2	3.6	Single	7.2	34.7	6.0	40.7	50.8	60	2	6	83	1	10
AMFK14AH AMFK15AH	240	49,147	14.4	4.8	Single	14.4	60.0	6.0	66.0	82.5	90	2	4	94	1	8
					Mult. 1	9.6	40.0	6.0	46.0	57.5	60	2	6	50	1	10
					Mult. 2	4.8	20.0	0.0	20.0	25.0	25	2	12		1	10
	208	36,860	10.8	3.6	Single	10.8	52.0	6.0	58.0	72.5	80	2	4	93	1	8
					Mult. 1	7.2	34.7	6.0	40.7	50.8	60	2	6	50	1	10
					Mult. 2	3.6	17.3	0.0	17.3	21.7	25	2	12		1	10
AMFK20AH	240	65,530	19.2	4.8	Single	19.2	80.0	6.0	86.0	107.5	110	2	2	115	1	6
					Mult. 1	9.6	40.0	6.0	46.0	57.5	60	2	6	63	1	10
					Mult. 2	9.6	40.0	0.0	40.0	50.0	50	2	8		1	10
	208	49,147	14.4	3.6	Single	14.4	69.3	6.0	75.3	94.2	100	2	3	90	1	8
					Mult. 1	7.2	34.7	6.0	40.7	50.8	60	2	6	63	1	10
					Mult. 2	7.2	34.7	0.0	34.7	43.3	45	2	8		1	10
AMFK25AH	240	81912	24.0	4.8	Single	24.0	100.0	6.0	106.0	132.5	150	2	1 / 0	148	1	6
					Mult. 1	9.6	40.0	6.0	46.0	57.5	60	2	6	50	1	10
					Mult. 2	9.6	40.0	0.0	40.0	50.0	50	2	8		1	10
					Mult. 3	4.8	20.0	0.0	20.0	25.0	25	2	12		1	10
	208	61,434	18.0	3.6	Single	18.0	75.1	6.0	81.1	101.4	110	2	2	106	1	6
					Mult. 1	7.2	34.7	6.0	40.7	50.8	60	2	6	50	1	10
					Mult. 2	7.2	34.7	0.0	34.7	43.3	45	2	8		1	10
					Mult. 3	3.6	17.3	0.0	17.3	21.7	25	2	12		1	10
AMFK30AH	240	98,294	28.8	4.8	Single	28.8	120.0	6.0	126.0	157.5	175	2	2 / 0	158	1	6
					Mult. 1	9.6	40.0	6.0	46.0	57.5	60	2	6	63	1	10
					Mult. 2	9.6	40.0	0.0	40.0	50.0	50	2	8		1	10
					Mult. 3	9.6	40.0	0.0	40.0	50.0	50	2	8		1	10
	208	73,721	21.6	3.6	Single	21.6	90.1	6.0	96.1	120.2	125	2	1	112	1	6
					Mult. 1	7.2	34.7	6.0	40.7	50.8	60	2	6	63	1	10
					Mult. 2	7.2	34.7	0.0	34.7	43.3	45	2	8		1	10
					Mult. 3	7.2	34.7	0.0	34.7	43.3	45	2	8		1	10

ELECTRICAL HEATER DATA TABLE: (Three Phase)

Heater Model	Supply Voltage	Nomi-Heating BTUH	Heat-KW	KW Per Element	Supply Circuit No.	Heater KW Per Circuit	Heater AMPS.	Maxi-Motor AMPS.	Total AMP	Branch Circuit Ampacity	Maximum Overcurrent Protective Device (AMPS.)	Recommended Supply Wire 75 ^{0} C. Copper No.	Size	Max. Length (F	Ground Wire No.	Siz
AMFH10AH	240	32,765	9.6	3.2	Single	9.6	23.1	6.0	29.1	36.4	40	3	8	100	1	10
	208	24,574	7.2	2.4	Single	7.2	20.0	6.0	26.0	32.5	35	3	10	61	1	10
AMFK15AH	240	49,147	14.4	4.8	Single	14.4	34.6	6.0	40.6	50.8	60	3	6	111	1	10
	208	36,860	10.8	3.6	Single	10.8	30.0	6.0	36.0	45.0	50	3	8	70	1	10
AMFH20AH	240	65,530	19.2	3.2	Single	19.2	46.2	6.0	52.2	65.2	70	3	4	138	1	8
					Mult. 1	9.6	23.1	6.0	29.1	36.4	40	3	8	79	1	10
					Mult. 2	9.6	23.1	0.0	23.1	28.9	30	3	10		1	10
	208	49,147	14.4	2.4	Single	14.4	40.0	6.0	46.0	57.5	60	3	6	85	1	10
					Mult. 1	7.2	17.3	6.0	23.3	29.2	30	3	10	57	1	10
					Mult. 2	7.2	17.3	0.0	17.3	21.7	25	3	12		1	10
AMFH25AH	240	81912	24.0	4.0	Single	24.0	57.7	6.0	63.7	79.7	80	3	4	113	1	8
					Mult. 1	12.0	28.9	6.0	34.9	43.6	45	3	8	83	1	10
					Mult. 2	12.0	28.9	0.0	28.9	36.1	40	3	8		1	10
	208	61,434	18.0	3.0	Single	18.0	50.0	6.0	56.0	70.0	80	3	4	111	1	8
					Mult. 1	9.0	21.7	6.0	27.7	34.6	35	3	10	57	1	10
					Mult. 2	9.0	21.7	0.0	21.7	27.1	30	3	10		1	10
AMFH30AH	240	98,294	28.8	4.8	Single	28.8	69.3	6.0	75.3	94.1	100	3	3	120	1	8
					Mult. 1	14.4	34.6	6.0	40.6	50.8	60	3	6	84	1	10
					Mult. 2	14.4	34.6	0.0	34.6	43.3	45	3	8		1	10
	208	73,721	21.6	3.6	Single	21.6	60.0	6.0	66.0	82.6	90	3	4	94	1	8
					Mult. 1	10.8	26.0	6.0	32.0	40.0	45	3	8	61	1	10
					Mult. 2	10.8	26.0	0.0	26.0	32.5	35	3	10		1	10

HEATER STAGING

HEATER MODEL	VOLTAGE	TOTAL HEAT		1st STAGE (W1)		2nd STAGE (W2)	
		208V	240V	208V	240V	208V	240V
AMFK05AH	208-240/1/60	3.6	4.8	3.6	4.8	-	-
AMFK07AH	208-240/1/60	5.4	7.2	2.7	3.6	2.7	3.6
AMFK10AH	208-240/1/60	7.2	9.6	3.6	4.8	3.6	4.8
AMFK14AH AMFK15AH	208-240/1/60	10.8	14.4	7.2	9.6	3.6	4.8
AMFK20AH	208-240/1/60	14.4	19.2	7.2	9.6	7.2	9.6
AMFK25AH	208-240/1/60	18.0	24.0	7.2	9.6	10.8	14.4
AMFK30AH	208-240/1/60	21.6	28.8	7.2	9.6	14.4	19.2
AMFH10AH	208-240/3/60	7.2	9.6	7.2	9.6	-	-
AMFH15AH	208-240/3/60	10.8	14.4	10.8	14.4	-	-
AMFH20AH	208-240/3/60	14.4	19.2	7.2	9.6	7.2	9.6
AMFH25AH	208-240/3/60	18.0	24.0	9.0	12.0	9.0	12.0
AMFH30AH	208-240/3/60	21.6	28.8	10.8	14.4	10.8	14.4

ACCESSORIES

Model	Description	Use With
AMF001NHA	No Heat Kit	EF08-20
AMFK05AHA* AMFK05AHB	5 KW Single Phase	EF08-20
AMFK07AHA* AMFK07AHB	7 1/2 KW Single Phase	EF08-20
AMFK10AHA* AMFK10AHB	10 KW Single Phase	EF08-20
AMFK14AHB	15 KW Single Phase	EF08-20
AMFK20AHB	20 KW Single Phase	EF12-20
AMFK25AHB	25 KW Single Phase	EF16-20
AMFK30AHB	30 KW Single Phase	EF16-20
AMFK20SPA	Single Point Wiring Kit	15-20 KW
AMFK30SPA	Single Point Wiring Kit	25-30 KW
AMFH10AHB	10 KW Three Phase	EF12-20
AMFH15AHB	15 KW Three Phase	EF12-20
AMFH20AHB	20 KW Three Phase	EF16-20
AMFH25AHB	25 KW Three Phase	EF16-20
AMFH30AHB	30 KW Three Phase	EF16-20

***AHA Models are Non-Breaker Models**

ACCESSORIES

Model	Description	Use With
AMF002OTA	2 Stage Outdoor Thermostat	7.5 KW & Above
AMF001DPA	Horizontal Drain Pan Kit	EF08-12
AMF002DPA	Horizontal Drain Pan Kit	EF16-20
AMF015DFA	Downflow Kit (Subbase)	EF08
AMF019DFA	Downflow Kit (Subbase)	EF12
AMF022DFA	Downflow Kit (Subbase)	EF16
AMF026DFA	Downflow Kit (Subbase)	EF20
AMF015WFA	Washable Filter	EF08
AMF019WFA	Washable Filter	EF12
AMF022WFA	Washable Filter	EF16
AMF026WFA	Washable Filter	EF20

*** Obtain thru Service Parts**

ACCEPTABLE LOOSE COILS FOR ELECTRIC FURNACES

EF08	EPA24B15A	EXA24B15A	EPA30B15A	EPA36B15A
EF12	EPA30F19A EXA24F19A	EPA36F19A EXA36F19A	EPA42F19A	EPA48F19A
EF16	EPA36J22A EXA36J22A	EPA42J22A EXA42J22A	EPA48J22A	EPA60J22A
EF20	EPA48N26A EXA48N26A	EPA60N26A EXA60N26A		

Shaded coils Have Not been tested with electric furnace
See Coil Specification Sheet for most current information.

MODEL NUMBER IDENTIFICATION GUIDE

EF 12 F19 00 A

PRODUCT FAMILY

EF = ELECTRIC FURNACE

SALES CODE

FIELD INSTALLED HEATERS

NOMINAL AIRFLOW
08 = 800 CFM 12 = 1200 CFM
16 = 1600 CFM 20 = 2000 CFM

MATCHING COIL (NOMINAL WIDTH)

ACCESSORIES NUMBER IDENTIFICATION GUIDE

A M F 001 DP A

PRODUCT GROUP

A = Accessories

SALES CODE

PRODUCT IDENTIFIER

PRODUCT TYPE

C = Cooling H = Heating X = Special
M = Multi Use (Heating and / or Cooling)

PRODUCT IDENTIFIER NUMBER

SERIES

ACCESSORY PRODUCT IDENTIFIER ASSIGNMENT

AH - Auxiliary Heater
OT - Outdoor Thermostat
WF - Washable Filter
SP - Single Point Wiring Kit
DP - Drain Pan Kit
DF - Downflow Kit
NH - No Heat Kit
TK - Thermostatic Expansion Valve