INSTALLATION INSTRUCTIONS
Modular Blower (115 Volt)
MB08B1500B, MB12F1900B, MB16J2200B, MB20L2400B

These instructions must be read and understood completely before attempting installation.

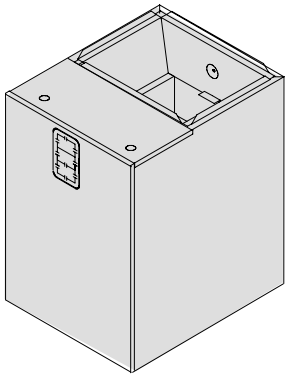

SAFETY CONSIDERATIONS

Improper installation, adjustment, alteration, service, maintenance, or use can cause explosion, fire, electrical shock, or other conditions which may cause death, personal injury, or property damage. Consult a qualified installer, service agency, or your distributor or branch for information or assistance. The qualified installer or agency must use factory–authorized kits or accessories when modifying this product. Refer to the individual instructions packaged with the kits or accessories when installing.

Follow all safety codes. Wear safety glasses, protective clothing, and work gloves. Use quenching cloth for brazing operations. Have fire extinguisher available. Read these instructions thoroughly and follow all warnings or cautions included in literature and attached to the unit. Consult local building codes, the current editions of the National Electrical Code (NEC) NFPA 70.

In Canada refer to the current editions of the Canadian Electrical Code CSA C22.1 Recognize safety information. This is the safety–alert symbol ⚠ When you see this symbol on the unit and in instructions or manuals, be alert to the potential for personal injury. Understand these signal words; **DANGER**, **WARNING**, and **CAUTION**. These words are used with the safety–alert symbol. **DANGER** identifies the most serious hazards which **will** result in severe personal injury or death. **WARNING** signifies hazards which **could** result in personal injury or death. **CAUTION** is used to identify unsafe practices which **may** result in minor personal injury or product and property damage. **NOTE** is used to highlight suggestions which **will** result in enhanced installation, reliability, or operation.

TABLE OF CONTENTS

General Information/Installation 2
Installation 2
Horizontal Installation 3
Ductwork Connection 3
Filter Installation 3
Electrical Connection 4
Motor Speed and Airflow 5
Blower Performance 5
Airflow Check 5
Wiring Diagram 6
Replacement Parts 6

⚠ WARNING

ELECTRICAL SHOCK HAZARD

Failure to turn off electric power could result in personal injury or death.

Before installing or servicing system, turn off main power to the system. There may be more than one disconnect switch, including accessory heater(s).

Figure 1 **Dimensions and Clearances – in(mm)**

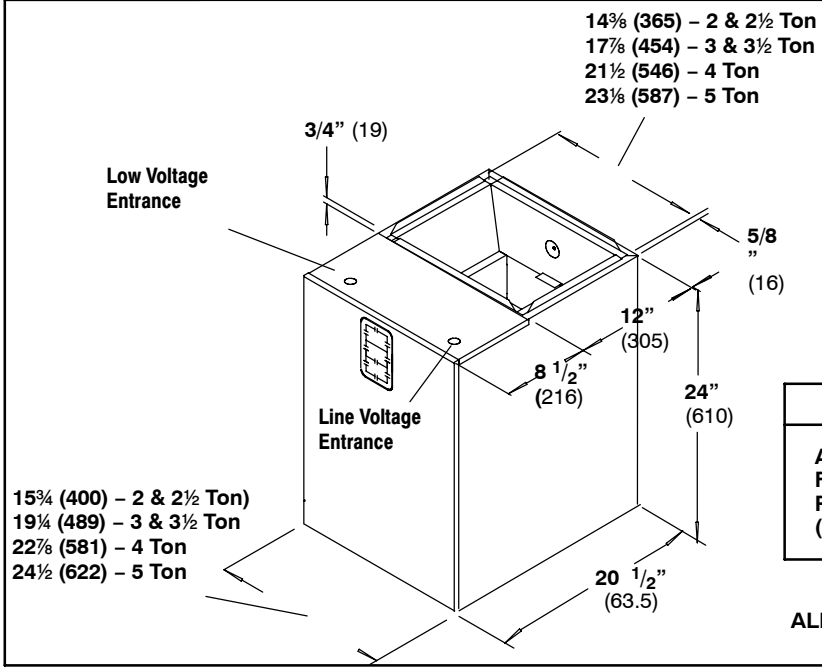

CLEARANCES	
All Sides	0"
From Supply Duct	0"
Recommended Service From Front (Service for blower)	20" (508mm)

ALL DIMENSIONS in(mm)

GENERAL INFORMATION

⚠ WARNING

DEATH, PERSONAL INJURY, AND/OR PROPERTY DAMAGE HAZARD

Failure to carefully read and follow this warning could result in equipment malfunction, property damage, personal injury and/or death.

The information contained in this manual is intended for use by a qualified service technician familiar with safety procedures and equipped with the proper tools and test instruments.

Installation must conform with local building codes and with the National Electrical Code NFPA70 current edition.

The MB modular blower is unique and utilizes a 115vac PSC blower motor. The MB cabinet may be used for cooling or heat pump applications. The cabinet can be installed in an upflow, downflow or horizontal position **(Figure 3, 4)**.

LOCATION

Select the best position which suits the installation site conditions. The location should provide adequate structural support, space in the front of the unit for service access, clearance for return air and supply duct connections, space for refrigerant piping connections and condensate drain line connections. **THESE BLOWERS ARE NOT TO BE USED WITH ELECTRIC HEAT.**

If the unit is located in an area of high humidity, nuisance sweating of casing may occur. On these installations a wrap of 2"(51mm) fiberglass insulation with a vapor barrier should be used.

⚠ CAUTION

CUT HAZARD

Failure to follow this caution may result in personal injury.

Sheet metal parts may have sharp edges or burrs. Use care and wear appropriate protective clothing and gloves when handling parts.

INSTALLATIONS

The unit is ready to install in any position without modifications.

Refer to the coil instructions for information on drain pan configurations etc. Make sure coil is set up properly for desired position of blower cabinet.

Coil must be secured to blower cabinet with the three tabs that are part of the blower cabinet base. Bend the tabs out from the bottom so they fit over the coil cabinet.

Position coil cabinet in relation to the blower so they will be correct for desired application.

For upflow and horizontal applications apply foam seal strip around top of coil cabinet. For downflow application apply foam seal strip around bottom of coil cabinet. Set blower on top of coil cabinet so they are flush. Secure cabinets together using the three tabs on the bottom of the cabinet. Bend the tab out from the bottom so it fits over the coil cabinet. If no pilot holes are present, drill a hole as required for a screw.

Figure 2 Attach Coil to Blower Cabinet

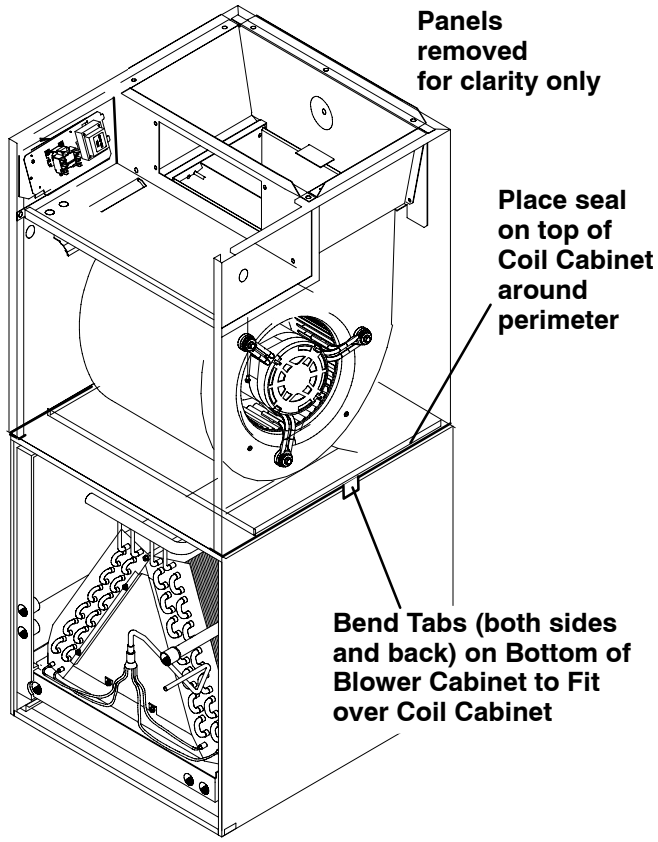

Figure 3 Upflow/Downflow Airflow Positions

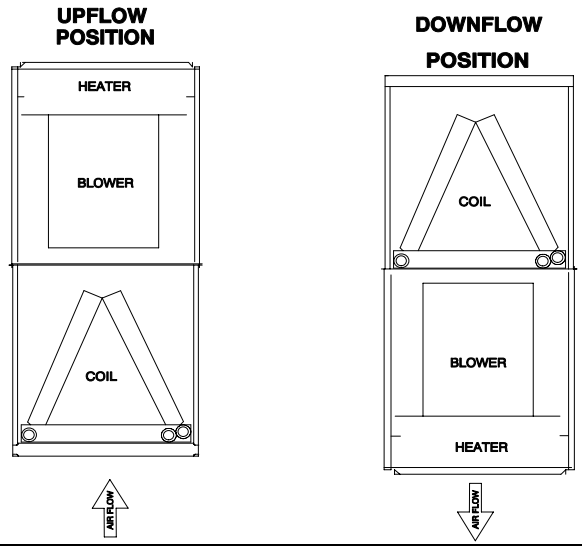

NON-DUCTED RETURN AIR CLOSET INSTALLATION

The cabinet can be installed in a closet with a false bottom to form a return air plenum, or mounted on an open platform inside the closet. Platform should be high enough to provide a free (open) area for adequate return airflow into the bottom of the cabinet. The open area can be on the front side or a combination of front and sides, providing there is clearance on the sides between cabinet and closet. **Refer to ACCA Manual D for sizing and free area recommendations.**
NOTE: Local codes may limit application of systems without a ducted return to single story dwellings.

HORIZONTAL LEFT AND RIGHT INSTALLATIONS

The modular blower cabinets can be installed in either downflow, horizontal left, or horizontal right applications. When a coil cabinet is applied, refer to the coil installation manual for proper drain pan and airflow requirements. They must have the drain pan repositioned for right hand airflow. Refer to coil installation manual.

⚠ CAUTION

PROPERTY DAMAGE HAZARD

Failure to follow this caution may result in property damage.

A field fabricated auxiliary drain pan, with a separate drain is REQUIRED for all installations over a finished living space or in any area that may be damaged by overflow from a restricted main drain pan. In some localities, local codes require an auxiliary drain pan for ANY horizontal installation.

Figure 4 Horizontal Airflow Positions

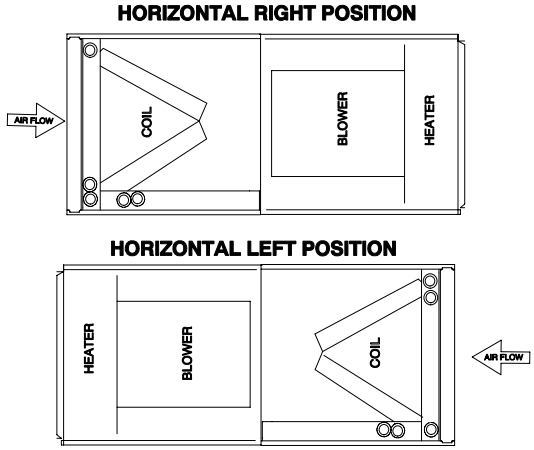

SUSPENDED CABINET INSTALLATION

1. The cabinet may be supported on a frame or shelf, or it may be suspended.
2. Use metal strapping or threaded rod with angle iron supports under the auxiliary drain pan to suspend cabinet. These supports **MUST** run parallel with the length of the cabinet (**Figure 5**).
3. Ensure that there is adequate room to remove service and access panels after installing supporting brackets.
4. Place field installed vibration isolators in auxiliary drain pan to support cabinet.

DUCT CONNECTIONS

Supply Duct

Supply duct must be attached to the outside of flange on outlet end of unit. Flexible connectors may be used if desired.

Return Duct

Return duct should be attached to bottom of unit using sheet metal screws or other fasteners.

FILTER INSTALLATION

Filters must be field supplied. A remote filter grille or other means must be provided. Refer to ACCA Manual D for remote filter sizing.

Figure 5 **Horizontal Installation**

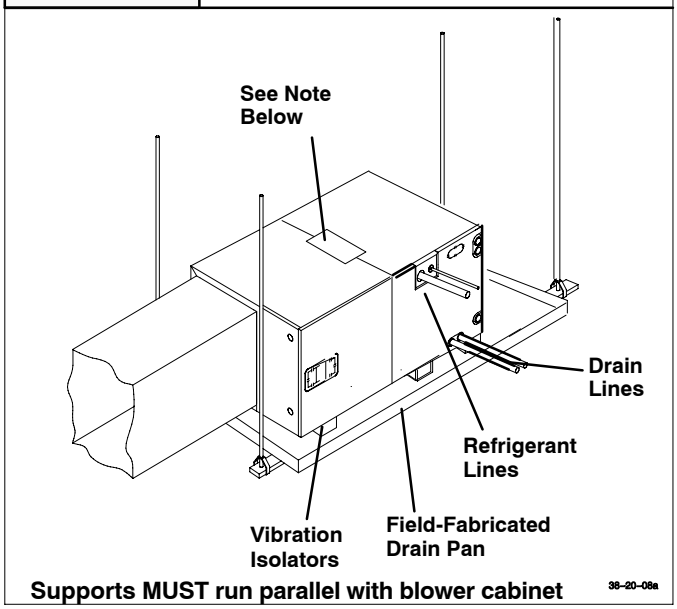

NOTE

If increased structural strength is needed in the horizontal position, use two field supplied connecting plates in place of the tabs on the bottom of the blower.

ELECTRICAL CONNECTIONS

⚠ WARNING

ELECTRICAL SHOCK or UNIT DAMAGE HAZARD

Failure to follow this warning could result in personal injury, death, and/or property damage.

Turn OFF electric power at fuse box or service panel before making any electrical connections and ensure a proper ground connection is made before connecting line voltage.

All electrical work MUST conform with the requirements of local codes and ordinances and the National Electrical Code NFPA 70 current edition.

The low voltage transformer and the fan relay are standard on all models and are prewired at the factory. Line voltage connections are made to the wire pigtails in the unit.

OVERCURRENT PROTECTION

The power supply wiring to the unit **MUST** be provided with overcurrent protection. Governing codes may require this to be fuses **ONLY** or circuit breakers.

For blower cabinets MB08, MB12 and MB16 a 15 AMP circuit should be used. For MB20 a 20 AMP circuit should be used.

LINE VOLTAGE CONNECTIONS

Line voltage wiring may be brought into the unit through the top right–hand corner. A hole for a 1/2” or 3/4” (12.7mm or 19mm) conduit fitting is provided.

Connect field wiring to the wire pigtails. All line voltage connections must be made with copper wire.

Line Voltage Connection

1. Provide line voltage power supply (115V) from a separate circuit.
2. Connect (115V) Hot to Black wire and Neutral to White wire.

GROUNDING CONNECTION

Use a copper conductor(s) from the ground lug to a grounded connection in the electric service panel or a properly installed grounding rod.

Model	Supply Circuit			Supply Circuit No.	H.P.	Maximum Motor AMPS.	MCA Branch Circuit Ampacity	Maximum Overcurrent Protective Device (AMPS.)	Recommended Supply Wire 75 ^{0} C. Copper			Recommended Ground Wire	
	Volts	Phase	Hertz						# of Wires	Wire Size	Max. Length (Ft)	# of Wires	Min. Size
MB08	115	1	60	Single	1/3	5.0	6.3	15	2	12	NEC*	1	14
MB12 MB16	115	1	60	Single	1/2	6.5	8.1	15	2	12	NEC*	1	14
MB20	115	1	60	Single	3/4	11.0	13.8	15	2	12	NEC*	1	14

* Refer to NEC and local codes

LOW VOLTAGE CONTROL CONNECTIONS

The 24 volt power supply is provided by an internally wired 115/24V low voltage transformer which is standard on **all models**.

Field supplied low voltage wiring can enter the unit on the top left hand corner.

Install the strain relief bushing (supplied with unit) in the selected hole.

Connect low voltage field wiring to the Brown (24V Common) and Red (24V Hot), and Gray (24V Fan) pigtails.

Keep the low voltage wiring as short as possible inside the control box.

Complete connections between indoor blower, outdoor section, indoor thermostat according to instruction provided with the Condenser Installation Instructions and refer to **Wiring Diagram.**

MOTOR SPEEDS AND AIRFLOW

The motor speed can be set to one of three speeds. To change the blower speed unplug the black wire connection at the blower motor and move to desired speed tap.

MB08	ESP	in wc						
SPEED	VOLTS	0.20	0.30	0.40	0.50	0.60	0.70	0.80
Low	115v	1011	1015	1011	985	942	875	796
Med	115v	1241	1225	1202	1175	1135	1075	991
High	115v	1387	1380	1372	1350	1311	1225	1119

MB12	ESP	in wc						
SPEED	VOLTS	0.20	0.30	0.40	0.50	0.60	0.70	0.80
Low	115v	1037	1050	1058	1055	1041	1025	996
Med	115v	1323	1340	1352	1355	1345	1320	1276
High	115v	1671	1685	1696	1685	1651	1600	1531

MB16	ESP	in wc						
SPEED	VOLTS	0.20	0.30	0.40	0.50	0.60	0.70	0.80
Low	115v	1046	1055	1055	1046	1034	1015	981
Med	115v	1369	1380	1384	1384	1368	1340	1300
High	115v	1718	1735	1750	1750	1736	1690	1634

MB20	ESP	in wc						
SPEED	VOLTS	0.20	0.30	0.40	0.50	0.60	0.70	0.80
Low	115v	1397	1380	1366	1348	1321	1288	1235
Med	115v	1796	1790	1777	1750	1705	1640	1554
High	115v	2336	2300	2255	2190	2106	1995	1873

MB08	ESP	Pa						
SPEED	VOLTS	50	75	100	125	149	174	199
Low	115v	477	479	477	465	445	413	376
Med	115v	586	578	567	555	536	507	468
High	115v	655	651	647	637	619	578	528

MB12	ESP	Pa						
SPEED	VOLTS	50	75	100	125	149	174	199
Low	115v	489	496	499	498	491	484	470
Med	115v	624	632	638	639	635	623	602
High	115v	789	795	800	795	779	755	723

MB16	ESP	Pa						
SPEED	VOLTS	50	75	100	125	149	174	199
Low	115v	494	498	498	494	488	479	463
Med	115v	646	651	653	653	646	632	613
High	115v	811	819	826	826	819	798	771

MB20	ESP	Pa						
SPEED	VOLTS	50	75	100	125	149	174	199
Low	115v	659	651	645	636	623	608	583
Med	115v	848	845	839	826	805	774	733
High	115v	1102	1085	1064	1034	994	941	884

AIR FLOW CHECK

For proper system operation, the air flow through the indoor coil should be between 350 and 450 cfm (165 and 212 L/s) per ton of cooling capacity. The air flow through the unit can be determined by measuring the external static pressure to the unit and selecting the motor speed tap that will most closely provide the required air flow.

1. Set up to measure external static pressure at the supply and return duct connections (**Figure 6**).
2. Drill holes in the ducts for pressure taps, pitot tubes, or other accurate pressure sensing devices.
3. Connect these taps to a level inclined manometer or draft gauge.
4. Ensure the coil and filter are clean, and all the registers are open.
5. Determine the external static pressure with the blower operating.
6. Refer to the Air Flow Data tables, to find the speed tap that will most closely provide the required air flow for the system.
7. Refer to Motor Speeds and Airflow in these instructions if the speed tap is to be changed.
8. Recheck the external static pressure with the new speed tap, and confirm speed tap selection.

Figure 6 **Static Pressure Check**

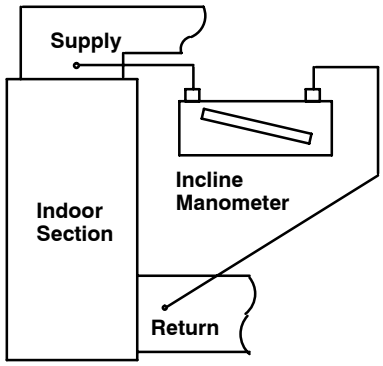

CARE AND MAINTENANCE

The system should be regularly inspected by a qualified service technician. Consult the servicing dealer for recommended frequency. Between visits, the only consumer service recommended or required is air filter maintenance and condensate drain operation.

AIR FILTER

Inspect air filters at least monthly and replace or clean as required. Disposable type filters should be replaced. Reusable type filters may be cleaned by soaking in mild detergent and rinsing with cold water. The frequency of cleaning depends upon the hours of operation and the local atmospheric conditions. Install filters with the arrows on the side pointing in the direction of air flow. Clean filters keep unit efficiency high.

LUBRICATION

The bearings of the blower motor are permanently lubricated.

CONDENSATE DRAINS

During the cooling season check the condensate drain lines to be sure that condensate is flowing from the primary drain but not from the secondary drain. If condensate ever flows from the secondary drain, the unit should be promptly shut off and the condensate pan and drains cleaned to insure a free flowing primary drain.

MB Wiring Diagram

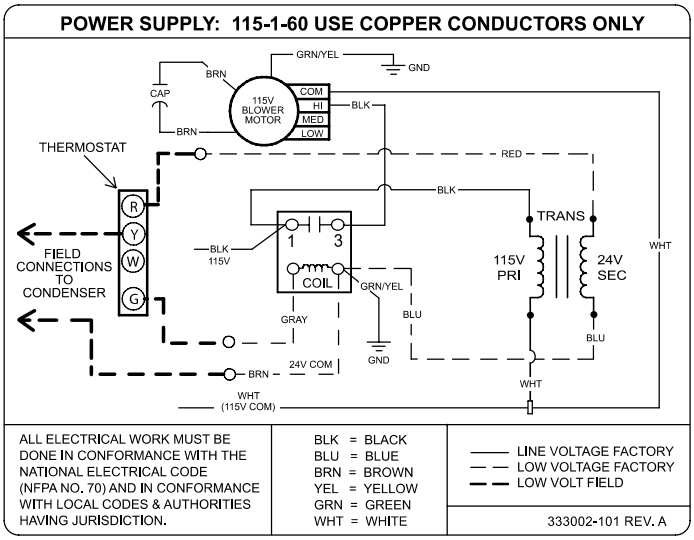

Replacement Parts Expanded View

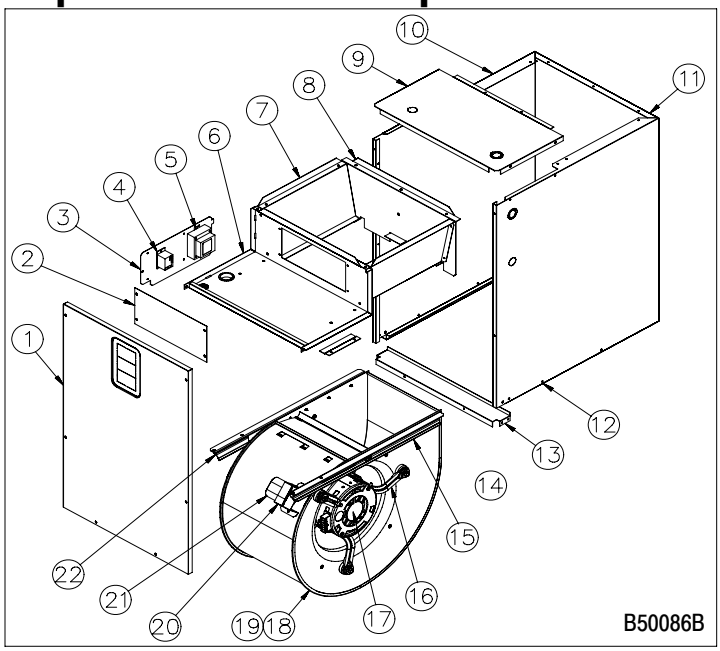

KEY NO.	PART NUMBER	DESCRIPTION	MB08B1500B2	MB12F1900B2	MB16J2200B2	MB20L2400B2	OLD PART #
1	B6000813	BLOWER DOOR ASS'Y	1	–	–	–	1176308
	B6000814		–	1	–	–	1176309
	B6000815		–	–	1	–	1176310
	B6000816		–	–	–	1	1176311
2	B6001701	PLATE HEATER CLOSURE ASS'Y	1	–	–	–	1084926
	B6001702		–	1	–	–	1084927
	B6001703		–	–	1	1	1084928
3	B60026	BRACKET CTL MTG	1	1	1	1	1176334
4	L01H009	24VAC SPDT RELAY	1	1	1	1	1176295
5	L01F011	TRANSFORMER 120-24v, 40VA	1	1	1	1	1086089
6	B60057	FRONT BLOWER DECK	1	–	–	–	1176322
	B60058		–	1	–	–	1176323
	B60059		–	–	1	–	1176324
	B60060		–	–	–	1	1176325
7	B60022	SIDE BLOWER DECK	2	–	–	–	1176326
	B60038		–	2	–	–	1176327
	B60041		–	–	2	–	1176328
	B60044		–	–	–	2	1176329
8	B60023	REAR BLOWER DECK	1	–	–	–	1176318
	B60039		–	1	–	–	1176319
	B60042		–	–	1	–	1176320
	B60045		–	–	–	1	1176321
9	B6000701	PANEL TOP ASS'Y	1	–	–	–	1176330
	B6000702		–	1	–	–	1176331
	B6000703		–	–	1	–	1176332
	B6000704		–	–	–	1	1176333
10	B60019	L.H. SIDE WRAPPER	1	1	1	1	1176316
11	B6001801	BACK WRAPPER	1	–	–	–	1176312
	B6001802		–	1	–	–	1176313
	B6001803		–	–	1	–	1176314
	B6001804		–	–	–	1	1176315
12	B60020	R.H. SIDE WRAPPER	1	1	1	1	1176317

KEY NO.	PART NUMBER	DESCRIPTION	MB08B1500B2	MB12F1900B2	MB16J2200B2	MB20L2400B2	OLD PART #
13	B6003601	BRACE, BOTTOM FRONT	1	–	–	–	1069603
	B6003602		–	1	–	–	1069604
	B6003603		–	–	1	–	1069605
	B6003604		–	–	–	1	1087670
14	B6005601	DECK BLOWER RAILS RIGHT	1	1	1	1	NA
	B6005602	DECK BLOWER RAILS LEFT	1	1	1	1	NA
15	B6006101	BLOWER RAILS R.H.	1	1	1	1	1085521
16	B0188801	MOTOR MOUNT ASS'Y (BAND AND LEGS)	1	1	1	–	NA
	B0188802		–	–	–	1	NA
17	B0189002	MOTOR ASS'Y (WITH MOTOR MOUNTS) 1/3HP - 3Spd	1	–	–	–	1176292
	B0189004	1/2HP - 3Spd	–	1	–	–	1176293
	B0189006	1/2HP - 3Spd	–	–	1	–	1176293
	B0189008	3/4HP - 3Spd	–	–	–	1	–
18	Z01I027	BLOWER HOUSING W/ WHEEL DD10-7	1	–	–	–	1176353
	Z01I028	DD10-8	–	1	–	–	1176354
	Z01I029	DD10-9	–	–	1	1	1176355
19	Z01L011	BLOWER WHEEL DD10x7x1/2 CW CV	1	–	–	–	600586
	Z01L012	DD10x8x1/2 CW CV	–	1	–	–	600587
	Z01L013	DD10x9x1/2 CW CV	–	–	1	1	96839
20	B60050	CAPACITOR CLAMP	1	1	1	1	1176307
21	L01I003	CAPACITOR 370V 10 MFD	1	1	1	–	1171729
	L01I012	440V 20 MFD	–	–	–	1	1172145
22	B6006102	BLOWER RAILS L.H.	1	1	1	1	1085504