AG Series

CONDENSING UNITS
10 + SEER
SPECIFICATIONS

1 1/2 THRU 5 TONS SPLIT SYSTEM

FEATURES

- High efficiency scroll compressors on all models
- Sweat valves on all models
- External refrigerant connections
- Copper tube / aluminum fin coil
- Prepainted condenser fins
- Fan motor in-line disconnect plug
- Factory charge
- Top air discharge for quieter operation
- Galvanized steel cabinet with integral base rails
- Triple step paint process
- Coated inlet grille
- 5 Year limited compressor warranty
- 11+ SEER with Expansion Valve coils

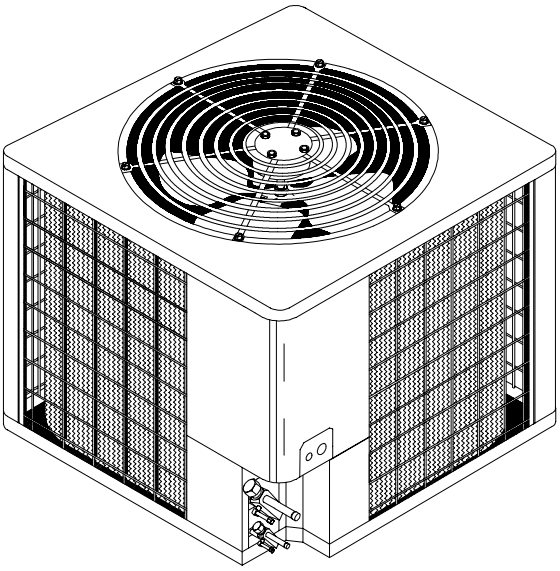

31–30–31d

Rated in accordance with ARI Standard 210. Certification applies only when used with proper components as listed with ARI.

International Comfort Products Corporation (USA)
650 Heil Quaker Avenue
Lewisburg, Tn. 37091

421 31 1102 08
March, 1999
Replaces 421 31 1102 07

UNIT SPECIFICATIONS

Model Number		AG018GB	AG024GB	AG030GB	AG036GB	AG042GB	AG048GB	AG060GB
Electrical Data	Voltage-Phase-Hz	208 / 230-1-60						
	Voltage Range (Min-Max)	197-253						
	Minimum Circuit Ampacity	11.9	14.1	18.9	21.3	24.6	28.6	35.7
	Wire SizelMax. Length (AWG Cu) Ft.	#14 / 50	#14 / 40	#14 / 30	#12 / 35	#12 / 25	#10 / 40	#8 / 50
	Time Delay Fuse (Amps)	15	20	25	30	30	35	45
	Max. Fuse or HACR Type Breaker	20	20	30	35	40	50	60
Compresor Data	Voltage-Phase-Hz	208 / 230-1-60						
	Full Running / Lock Rotor Amps	9.0 / 42	10.3 / 53	14.1 / 73	16.0 / 100	18.6 / 127	21.8 / 131	27.1 / 175
	Crankcase Heater (Type)	-	-	-	-	-	-	-
Fan Data	Voltage-Phase-Hz	208 / 230-1-60						
	Horsepower / Type	1/5 / PSC	1/5 / PSC	1/5 / PSC	1/5 / PSC	1/3 / PSC	1/3 / PSC	1/3 / PSC
	Full Load / Lock Rotor Amps.	1.3 / 2.3	1.3 / 2.3	1.3 / 2.3	1.3 / 2.3	1.4 / 3.6	1.4 / 3.6	1.9 / 4.35
	Speeds / CFM (Max)	1 / 2100	1 / 2100	1 / 2100	1 / 2200	1 / 2800	1 / 3000	1 / 3500
Outdoor Coil Data	Total Face Area (Sq. Ft.)	10.73	10.73	10.73	13.41	15.39	20.13	21.31
	Fins Per Inch / Rows	20 / 1	20 / 1	22 / 1	22 / 1	22 / 1	22 / 1	22 / 1
	Tube Diameter (OD) (In.)	3/8						
Charge	Suction I.D. Size (In.)	3/4				7/8		
	Liquid I.D. Size (In.)	5/16				3/8		
	Factory Charge R-22 (Oz)	59	73	74	82	98	134	150
Weights	Shipping / Net (Lbs.)	130 / 122	132 / 123	140 / 131	156 / 146	183 / 165	193 / 180	209 / 196

MODEL NUMBER IDENTIFICATION GUIDE

MODEL NUMBER A G 024 G B

PRODUCT TYPE
Y = Heat Pump
A = Air Conditioning

SERIES
G = 10 SEER

REVISION LEVEL

ELECTRICAL
208 / 230 - 1 - 60

NOMINAL CAPACITY MBTUH
024 = 24,000

PERFORMANCE DATA SINGLE PHASE COOLING

OUTDOOR MODEL	INDOOR MODEL	BTUH	SEER RATINGS BASE	+ TD1	+ TXV	+ TD1 + TXV	EER	WATTS	S/T	CFM	PIN	dBels
AG018GB	EP*18B15A	17,500	10.90	11.10	11.30	11.40	10.40	1683	.74	600	.051	72
	EP*24B15A	18,000	11.00	11.20	11.40	11.50	10.60	1689	.75	600	.051#	
	EP*30(B15,F19)A	18,000	11.10	11.30	11.50	11.60	10.60	1698	.75	600	.051#	
	EPD/M30F19A + EV12F19	18,100	---	---	12.60	---	11.60	1560	.75	600	.051#	
	EEA,EED24B15A	17,500	10.90	11.10	11.30	11.40	10.40	1683	.74	600	.051	
	EX*24(B15,F19)A	18,300	11.30	11.40	---	---	10.80	1694	.73	600	TXV	
	H24PSA	18,000	11.00	11.20	11.40	11.50	10.70	1682	.74	600	.051#	
	H36PSA	18,500	11.20	11.40	11.60	12.00	10.90	1697	.74	600	.051#	
	FCP2400A	17,500	10.90	---	11.30	---	10.20	1715	.74	600	.051#	
	FCX2400A	18,200	11.20	---	---	---	10.70	1699	.73	600	TXV	
AG024GB	EEA,EED24B15A	22,800	10.00	---	---	---	9.5	2400	.73	700	.059#	74
	EP*24B15A	23,600	10.50	10.70	10.90	11.00	10.20	2314	.74	800	.059	
	EP*30(B15,F19)A	23,600	10.60	10.80	11.00	11.10	10.20	2314	.76	800	.059#	
	EPD/M30F19A = EV12F19	23,800	---	---	12.10	---	11.20	2125	.76	800	.059#	
	EX*24(B15,F19)A	24,200	11.20	11.30	---	---	10.30	2350	.75	800	TXV	
	H24PSA	24,200	10.50	10.70	10.90	11.00	10.20	2353	.72	800	.059#	
	H36PSA	24,200	10.70	11.00	11.10	11.20	10.70	2286	.75	800	.059#	
	FCP2400A	23,600	10.50	---	11.00	---	10.00	2360	.74	800	.059#	
	FCX2400A	24,200	11.10	---	---	---	10.30	2350	.75	800	TXV	

SPECIFICATIONS SUBJECT TO CHANGE WITHOUT NOTICE

PERFORMANCE DATA COOLING

OUTDOOR MODEL	INDOOR MODEL	BTUH	SEER RATINGS				EER	WATTS	S/T	CFM	PIN	dBels
			BASE	+ TD1	+ TXV	+ TD1 + TXV						
AG030GB	EEA,EED30B15A	28,000	10.00	---	---	---	9.5	2947	.73	1000	.065#	76
	EP*30(B15,F19)A	28,600	10.50	10.70	10.90	11.00	9.70	2948	.76	1000	.065	
	EPD/M30F19A + EV12F19	28,800	---	---	12.00	---	10.70	2692	.76	1000	.065	
	EP*36(B15,F19,J22)A	28,800	10.60	10.80	11.00	11.10	9.70	2969	.75	1000	.065#	
	EPD/M36F19A + EV12F19	29,000	---	---	12.10	---	10.70	2710	.75	1000	.065#	
	EPD/M36J22A + EV16J22	29,000	---	---	12.10	---	10.70	2710	.75	1000	.065#	
	EX*36(F19,J22)A	30,000	11.20	11.30	---	---	10.00	3000	.74	1000	TXV	
	H36PSA	28,200	10.40	10.60	10.80	11.00	9.50	2968	.73	1000	.065#	
	FCP3000A	28,600	10.50	---	10.90	---	9.50	3010	.76	1000	.065	
	FCX3600A	30,000	11.10	---	---	---	10.00	3000	.74	1000	TXV	
AG036GB	EEA,EED36	33,600	10.00	---	---	---	9.4	3574	.74	1200	.072#	76
	EP*36(B15,F19,J22)A	34,400	10.50	10.70	10.90	11.00	9.50	3621	.75	1200	.072	
	EPD/M36F19A + EV12F19	34,600	---	---	12.00	---	10.50	3295	.75	1200	.072	
	EPD/M36J22A + EV16J22	34,600	---	---	12.00	---	10.50	3295	.75	1200	.072	
	EP*42(F19,J22)A	36,000	11.00	11.20	11.40	11.50	10.60	3396	.74	1200	.072#	
	EPD/M42F19A + EV12F19	36,200	---	---	12.50	---	11.60	3121	.74	1200	.072#	
	EPD/M42J22A + EV16J22	36,200	---	---	12.50	---	11.60	3121	.74	1200	.072#	
	EX*36(F19,J22)A	36,000	11.50	11.60	---	---	10.30	3495	.74	1200	TXV	
	H36PSA	33,800	10.40	10.60	10.80	11.00	9.40	3596	.74	1200	.071	
	FCP3600A	34,400	10.50	---	10.90	---	9.30	3699	.75	1200	.072	
	FCX3600A	36,000	11.30	11.10	---	---	10.30	3495	.74	1200	TXV	
AG042GB	EEA, EED42F19	39,500	10.00	---	---	---	9.50	3879	.74	1225	.078	76
	EP*42(F19,J22)A	42,000	10.50	10.70	10.90	11.00	9.90	4242	.74	1225	.078	
	EPD/M42F19A + EV12F19	42,500	---	---	12.00	---	10.90	3899	.74	1225	.078	
	EPD/M42J22A + EV16J22	42,500	---	---	12.00	---	10.90	3899	.74	1225	.078	
	EX*42J22A	42,000	11.00	11.10	---	---	9.90	4242	.71	1400	TXV	
	EP*48F19A	42,500	10.90	11.10	11.30	11.40	9.90	4293	.74	1400	.078#	
	EPD/M48F19A + EV12F19	42,500	---	---	12.50	---	10.90	3899	.74	1400	.078#	
	EP*48(J22,N26)A	42,500	11.00	11.20	11.40	11.50	10.00	4250	.73	1400	.079	
	EPD/M48J22A + EV16J22	42,500	---	---	12.40	---	10.90	3899	.73	1400	.079	
	EPD/M48N26A + EV20N26	42,500	---	---	12.50	---	11.00	3864	.73	1400	.079	
	EEA,EED48F19A	42,000	10.50	10.70	10.90	11.00	9.90	4242	.74	1225	.078	
	H48PSA	42,500	11.00	11.20	11.40	11.50	10.00	4250	.73	1400	.078#	
	FCP4200A	42,000	10.50	---	10.90	---	9.50	4421	.74	1400	.078	
	FCX4800A	42,000	11.00	---	---	---	9.90	4242	.71	1400	TXV	
AG048GB	EEA,EED48F19A	43,000	10.00	---	---	---	9.4	4574	.73	1225	.079#	78
	EP*48(F19,J22,N26)A	46,000	10.50	10.70	10.90	11.00	9.80	4694	.76	1600	.079	
	EPD/M48F19A + EV12F19	46,500	---	---	12.00	---	10.80	4306	.76	1600	.079	
	EPD/M48J22A + EV16J22	46,500	---	---	12.00	---	10.80	4306	.76	1600	.079	
	EPD/M48N26A + EV20N26	46,500	---	---	12.00	---	10.80	4306	.76	1600	.079	
	EX48N26A	46,000	11.50	11.60	---	---	10.10	4554	.73	1600	TXV	
	EP*60(J22,N26)A	47,000	11.00	11.20	11.40	---	9.80	4694	.76	1600	.079#	
	H48PSA	44,500	10.90	11.10	11.30	11.50	9.70	4588	.74	1600	.079#	
	H60PSA	46,500	11.00	11.20	11.40	11.50	9.90	4697	.74	1600	.079#	
	FCP4800A	46,000	10.50	---	10.90	---	9.60	4791	.76	1600	.079	
	FCX4800A	45,500	11.30	---	---	---	9.80	4664	.73	1600	TXV	
AG060GB	EEA,EED60J22A	54,500	10.00	---	---	---	9.5	5737	.70	1400	.089#	78
	EP48N26A	57,500	10.50	10.70	10.90	11.00	9.70	5928	.70	1600	.089	
	EP*60J22A	58,000	10.50	10.70	10.90	11.00	9.60	6042	.69	1600	.090	
	EPD/M60J22A + EV16J22	58,500	---	---	11.20	---	9.80	5969	.69	1600	.090	
	EP*60N26A	58,000	10.50	10.70	10.90	11.00	9.60	6042	.69	1800	.090	
	EPD/M60N26A + EV20N26	58,500	---	---	11.20	---	9.80	5969	.69	1800	.090	
	EX*60N26A	60,000	11.00	11.10	---	---	9.90	6061	.69	1750	TXV	
	H60PSA	60,000	10.70	10.90	11.10	11.50	9.60	6250	.70	1800	.089#	
	FCP6000A	58,000	10.50	---	10.90	---	9.60	6042	.69	1800	.090	
	FCX6000A	59,000	10.60	---	---	---	9.70	6082	.69	1750	TXV	

= Installer must change pin to size indicated. PIN = Refrigerant orifice PIN size. TD1 = AMA001TDA Indoor Blower Time Delay Kit, required to make SEER indicated. ST9120, FCP, FCX, and EF fan controls satisfy TD1 requirements. TXV = Thermostatic Expansion Valve, use TXV153 (AMF153KA) on 1 1/2 to 3 tons, use TXV335 (AMF335KA) on 3 1/2 to 5 tons. For Electric Frunace (EF Series) ratings: EF08B1500A = EPA24B15A+TD1, EF12F1900A = EPA36F19A+TD1, EF16J2200A = EPA48J22A+TD1, EF20N2600A = EPA60N26A+TD1.

SPECIFICATIONS SUBJECT TO CHANGE WITHOUT NOTICE

SPECIFICATIONS SUBJECT TO CHANGE WITHOUT NOTICE

Accessory	Description	Used On
AMF153TKA	Expansion Valve Kit (Use with New Coils)	1 1/2 – 3 Ton
AMF355TKA	Expansion Valve Kit (Use with New Coils)	3 1/2 – 5 Ton
AMA001TDA	Indoor Blower Time Delay	All Models
24370800 *	Compressor Anti-short cycle 24 Volt 3 Min. Time Delay	All Models
1070822*	Compressor Anti-short cycle 24 Volt 5 Min. Time Delay	All Models
1148671 *	Low Ambient Kit (Fan Cycling Switch)	All Models
1053477 *	Compressor Crankcase Heater Solid State "Stick On" Type	All Models
1148113 *	Compressor Crankcase Heater "Wrap-around" Type	All Models
1060833*	Compressor Sound Jacket	3 Ton
1060834 *	Compressor Sound Jacket	4 and 5 Ton

* Order from Service Parts

EXTENDED REFRIGERANT LINE CORRECTION FACTORS

Varying Line Length in Feet (m) vs. Total Capacity Multiplier					
25 (8)	50 (15)	75 (23)	100 (30)	125 (38)	150 (46)
1.00	.99	.98	.96	.94	.92

REFRIGERANT CHARGE DATA

All models are factory charged with R-22 for outdoor unit, 25' (8m) of refrigerant line and matching indoor section. Refrigerant charge correction per foot (305mm) of line: 1/4″ O.D. = .25 oz.; 5/16″ O.D. = .45 oz.; 3/8″ O.D. = .60 oz.; 1/2″ O.D. = 1.2 oz.

VOLTAGE CORRECTION FACTORS

Volts	Capacity	Watts
208	.98	.99

INDOOR AIRFLOW CORRECTION TABLE

% Rated Air	90	95	100	105	110
Total Cap. Mult.	.98	.99	1.00	1.01	1.03
Sens Cap. Mult.	.95	.98	1.00	1.03	1.05

INDOOR TEMPERATURE CORRECTION TABLE
(Based on 95°F Ambient)

Indoor D.B. °F (°C).	Correction Factor	Entering Indoor Wet Bulb °F (°C).						
		59 (15)	61 (16)	63 (17)	65 (18)	67 (19)	69 (20)	71 (21)
70 (21)	Total Cap. Mult.	**.90**	.93	.96	.99	1.02	–	–
	Sens Cap. Mult.	**.86**	.85	.82	.77	.70	–	–
75 (24)	Total Cap. Mult.	.89	.92	**.95**	.98	1.01	1.04	–
	Sens Cap. Mult.	1.04	1.03	**1.00**	.95	.88	.78	–
80 (26)	Total Cap. Mult.	.88	.91	.94	.97	**1.00**	1.03	1.06
	Sens Cap. Mult.	1.18	1.17	1.14	1.08	**1.00**	.89	.73
85 (29)	Total Cap. Mult.	–	.90	.93	.96	.99	1.02	**1.05**
	Sens Cap. Mult.	–	1.29	1.26	1.20	1.11	.98	**.81**

Bold Type = approximately 50% Relative Humidity

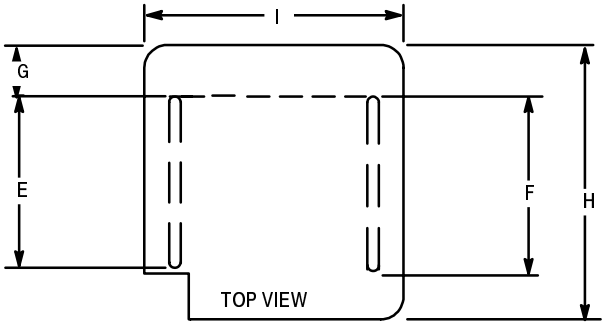
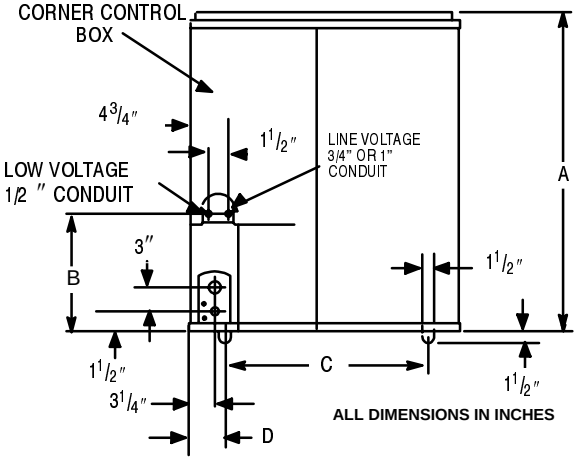
Model	A	B	C	D	E	F	G	H	I
AG018	24	11-1/4	17-1/2	4	12-1/2	16-1/2	4-1/2	23-1/2	23-1/2
AG024	24	11-1/4							
AG030	24	11-1/4							
AG036	30	17-1/4							
AG042	26	10-3/4	22	4	17-5/8	18-3/4	5-1/2	30	30
AG048	34	18-3/4							
AG060	36	20-3/4